7.11 SISTEMA DE DETECCIÓN

El sistema de detección de rieles montado sobre este vehículo desarrollado usualmente desarrollado por Chengdu Tang Yuan Electric Co., Ltd. y por el laboratorio de energía nacional de tracción de nivel Southwest Jiaotong University. Esta tecnología se basa en el sistema GJ 5 líder mundial en su tipo; adopta principios de medición de referencia inercial, y en forma general utiliza varios dispositivos y sensores de precisión; adopta tecnología de procesamiento digital y de simulación con características de alta capacidad de rechazo de interferencias de señales y alta precisión.

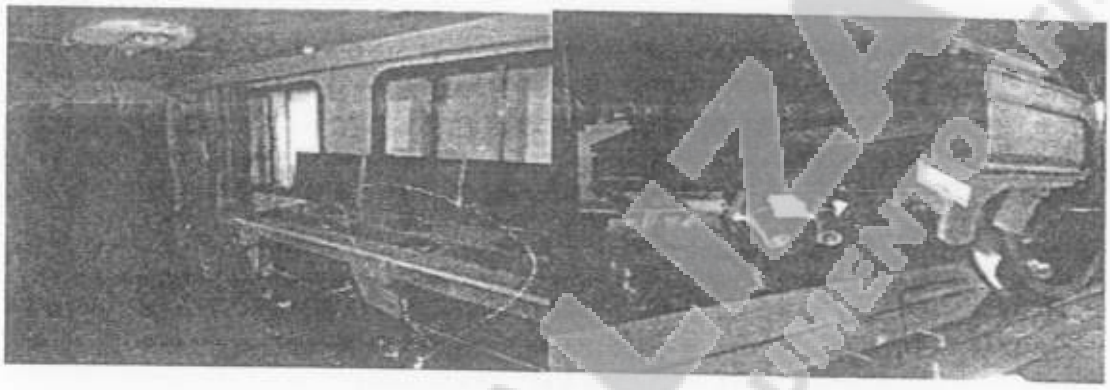

El sistema de detección se utiliza principalmente para la detección y análisis de trochas, límite de gálibos y desgaste de los rieles. Los dispositivos de detección de vías se encuentran principalmente en el rayo de detección a fin de detectar la conexión del haz con el bastidor del bogie. Los dispositivos montados en el haz de detección de fallas incluyen: un sensor láser 2D, un paquete de detección por inercia, un dispositivo de detección a marcha continua en la vía, y una red de área local a bordo.

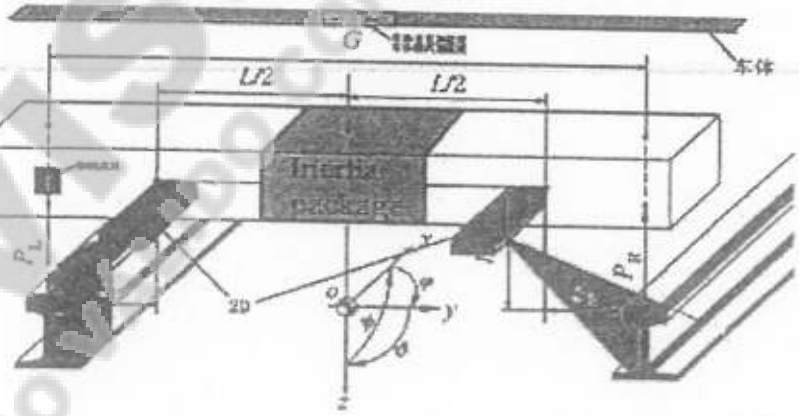

[Página Siguiente]

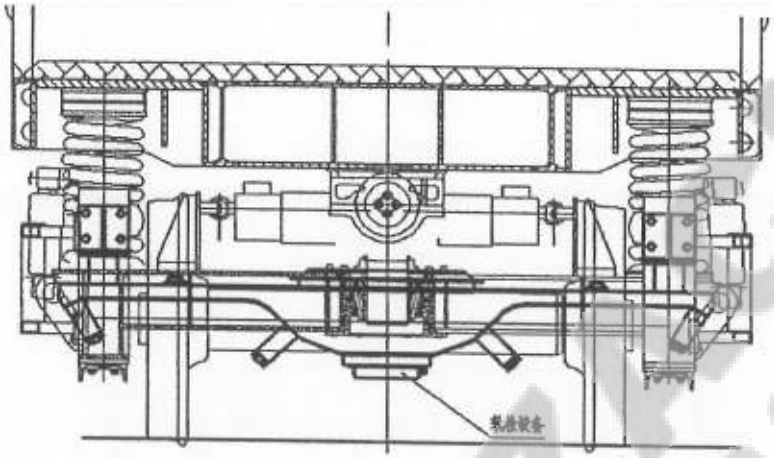

El sistema de detección de vías utiliza una tecnología de prueba multicanal sobre una red distribuida, y controla en forma remota la operación simultánea de dispositivos de prueba en diferentes lugares con la computadora, y transmite la información y la sincroniza a través de la red. Posee, además de las funciones de adquisición y procesamiento de señales originales, el almacenamiento de información intermedia y resultados finales, visualización online del oscilograma, transmisión de datos a través de la red, informe de resultados fuera de los límites, corrección de la progresiva, posterior retransmisión de información almacenada, resultante de los oscilogramas y detalles de lugar y velocidad. Permite la adquisición de datos, el almacenamiento de información de origen, evaluación de la validez de la información y visualización del oscilograma.— — — — — — — — — — — — — — — — — — — —

El sistema de detección de límites de gálibos de las vías consiste en un dispositivo principal de detección de límites de gálibos, un dispositivo de compensación y un sistema de procesamiento de información dentro del vehículo. Principalmente hace uso de la tecnología de medición por escaneo láser a fin de permitir la medición del perfil de obra, componiéndolo de manera continua y la evaluación automática de los puntos fuera de gálibo en base al procesamiento de imágenes y un algoritmo de reconocimiento. Puede recibir sincrónicamente la señal de pulsos y la información de posición del sistema de posicionamiento, en forma simultánea a fin de permitir acumulación de recorrido y una localización precisa.— — — — — — — — — —

[Página Siguiente] ----------

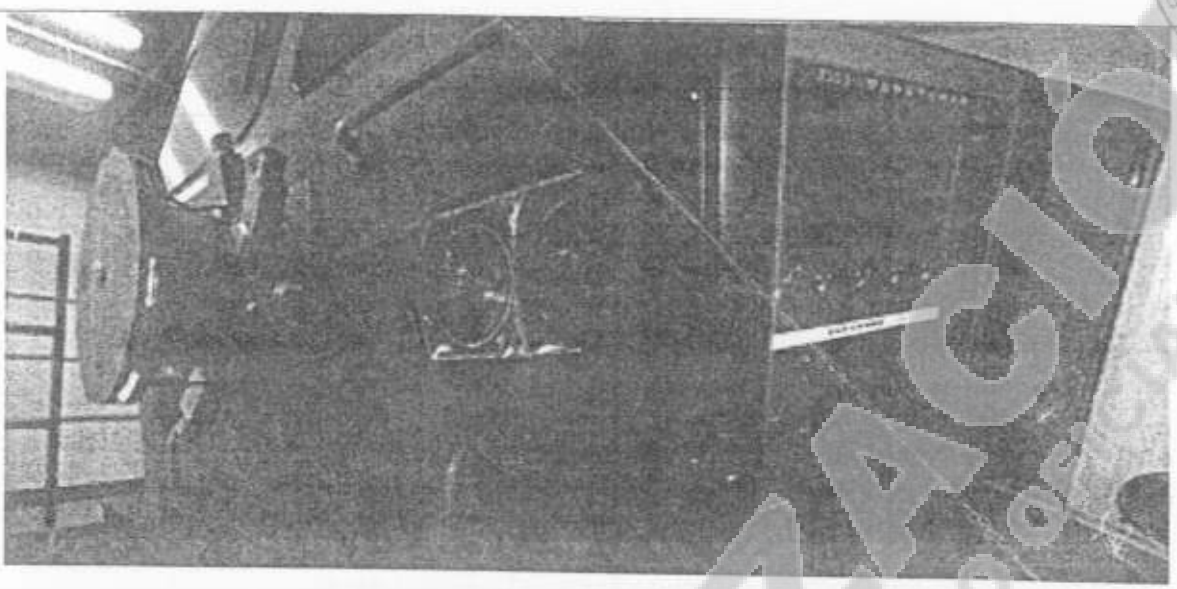

Artefacto de detección de límites de gálibos

Tratamiento de procesamiento de información

En la sala de medición de vías, existe una plataforma operativa, un gabinete con el equipo, una base de interconexión de equipos, etc para el sistema de medición de vías. Cada mesa de operador se encuentra instalada con un toma corriente de energía de 220V AC que provee energía al monitor, la laptop, etc. Bajo carga completa, existen posiciones extras suficientes para tomas corrientes de repuesto para la carga de celulares, walkie-talkies y otros.— — — —

El área de medición de vías se encuentra equipada con un UPS (sistema de alimentación ininterrumpida por un mínimo de 10 horas), utilizado para respaldar el almacenamiento de información del sistema de detección de fallas de rieles y el sistema de medición de líneas bajo emergencia. EL UPS es un UPS de grado industrial, a prueba de golpes, a prueba de explosiones y no interferente. La potencia de salida se ajusta al requerimiento de potencia en emergencia del sistema de detección de fallas de rieles y del sistema de medición de vías.— — — — — —

Area de medición de vías

[Página Siguiente] ----------

7.12. Sala de análisis de datos

La sala de análisis se utiliza principalmente para el análisis de información detectada y descanso del personal. Dentro de esta sala hay una mesa de conferencia oval, grandes pantallas, bebederos, etc., al igual que un toma corriente de energía de 220V CA, ≥2kW para computadoras, celulares, walkie-talkies y otros equipos electrónicos.

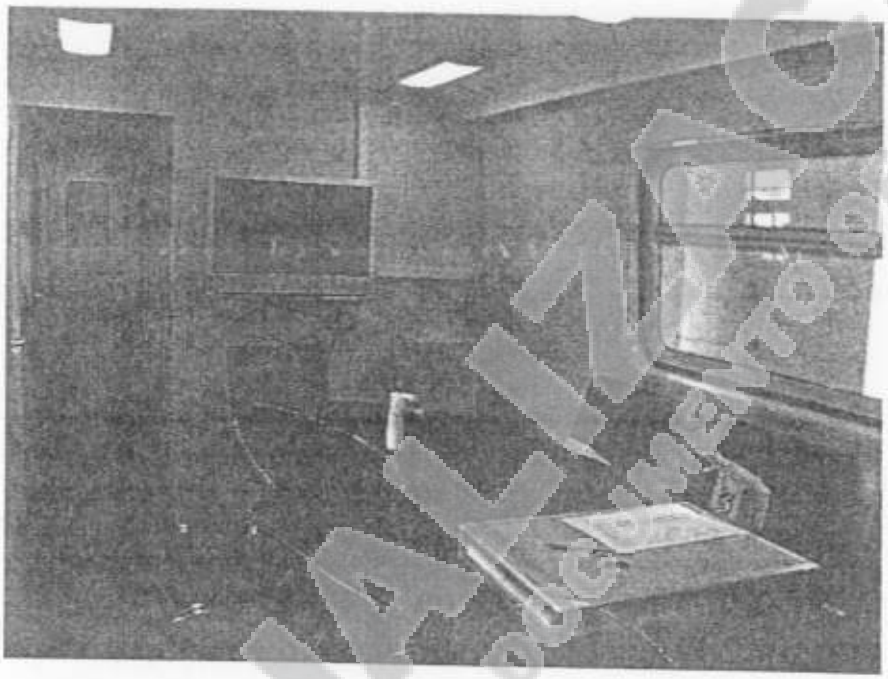

Sala de análisis

7.13. Parámetros técnicos principales del sistema de medición de la vía

El sistema de medición cumple con la EN 13848. Los artículos de medición no se limitan a la siguiente lista sino que los definitivos serán determinados durante la reunión de coordinación.

Sistema de detección de geometría de vías

Nro.	Parámetro	Resolución	Precisión	Rango de Medición	Comentarios
1	Trocha	≦0.5mm	±1mm	-15mm/+50mm	Límite de desgaste necesita ser definido
2	Nivel Longitudinal	≦0.5mm	±1mm	±50mm	Largo de onda 3m-25m
		≦0.5mm	±3mm	±100mm	Largo de onda 25m-70m
		≦0.5mm	±5mm	±300mm	Largo de onda:71m-

						150m	
	3	Peralte	≦0.5mm	±5mm	±225mm	-	

[Página Siguiente] ----------

4	Alineación	≦0.5mm	±1.5mm	±50mm	Largo de onda : 3m-25m	
		≦0.5mm	±4mm	±100mm	Largo de onda : 25 m – 70 m	
		≦0.5mm	±10mm	±500mm	Largo de onda : 71 m - 200 m	
5	Alabeo	≦0.5mm	±1.5/ℓ	±15mm/m	ℓ = 3 m	
6	Curvatura	-	≤0.05°/30m ≤±2mm	±23°/30m 6.25~1000mm	-	
7	Aceleración lateral y vertical del equipo	-	≤±0.01g	±2g	-	

Sistema de detección de perfil del riel – De acuerdo a EN 13848

Nro.	Parámetros	Precisión	Comentarios
1	Desgaste vertical de cabezal	±0.3mm	Comparado con perfil de riel nuevo
2	Desgaste lateral	±0.3mm	
3	Inclinación de riel	±0.3mm	
4	Conicidad Equivalente	±0.3mm	
5	Perfil del riel	±0.3mm	

Sistema de detección de gálibos

Nro.	Parámetros	Requerimientos de Desempeño	Comentarios
1	Entorno del Equipo	±20mm	La precisión de medición de línea recta de ± 20mm, con una resolución de 5mm. Aclaración: la distancia de escaneo dentro de 3000 mm, con una resolución de 5 mm; Precisión de sección recta y segmento curvo de radio grande del 85%, no se requiere segmento curvo de radio pequeño temporalmente
2	Resolución angular	0.055°	-
3	La máxima distancia	3000 mm	La distancia de escaneo máxima dentro de

	de escaneo		este rango puede cumplir con la precisión requerida, mayor a esta distancia puede escanear pero la precisión es levemente inferior. A esta distancia, la resolución es 5mm.
4	La mínima distancia de escaneo	500mm	A esta distancia, la resolución es 2mm
5	Punto de información válidos por revolución	Más de 8000 puntos	Partes duplicadas para prevenir la no detección de alguna porción.

[Página Siguiente] ----------

6	velocidad más conveniente	40km/h	
7	Tiempo de trabajo continuo	>12 horas	12 horas sin parar
8	Almacenamiento de información	1T	Se puede almacenar toda la información de prueba de 3000 km de marcha.
9	Medición	Sin contacto	
10	Métodos de Prueba	Inspección de Punto	
11	Precisión del posicionamiento	Refiérase al Anexo-1	

Cuadro de precisión del sistema de posicionamiento — — — — — —

Nro.	Descripción	rango	Precisión
1	Velocidad	0 ~ 90km/h	< ±1 km/h
2	Distancia	0 ~ 9999km	< ±1 m/km

Sistema de detección de corrugación — — — — — — —

Nro.	Parámetro	Rango de Detección
1	Profundidad de detección de corrugación	5 mm
2	Largo de detección de corrugación	30 mm - 1000 mm

- Otras mediciones de acuerdo a la EN 13848 – Anexo B y EN 13848-5 – — — — —
- Calificación de calidad de geometría de vías con velocidad máxima recomendada de acuerdo a la EN 13848-6 — — — — — — — — — — —

7.14 SOFTWARE, GPS y COMUNICACIONES

Refiérase al Anexo-1

7.15 VARIOS

- Sala de Servidores y Computación
- En la sala de reuniones y en la sala de operaciones deben colocarse indicadores de velocidad, línea, posición, etc. El contenido debe ser programable.
- Todas las sondas láser debe estar rodeadas por una caja protectora.
- Intercomunicación entre cabinas y sala de operaciones.
- Se instalarán dos cortinas en cada ventana, con excepción de la cabina, con dos grados de transparencia: una para atenuar la luz entrante y la otra como black-out.
- Los faros de cabecera serán capaces de iluminar y distinguir a una persona a 200 mts. de distancia localizada en el eje de una vía recta.

Certifico que lo que antecede es traducción fiel al idioma español, del documento en idioma inglés, que he tenido ante mí, y al cual me remito. En Buenos Aires, el día 30 de septiembre del año dos mil quince. ----------

66505 / 15

AGUSTINA SAUBIDET MARIN
TRADUCTORA PÚBLICA
INGLES
MAT. To. XIV Fo. 107 CAPITAL FEDERAL
INSCRIP. C.T.P.C.B.A. Nº 4993

ANEXO I

0425

[redacted]

ANEXO II

0425

COLEGIO DE TRADUCTORES PÚBLICOS DE LA CIUDAD DE BUENOS AIRES

República Argentina
Ley 20305

LEGALIZACIÓN

Por la presente, el COLEGIO DE TRADUCTORES PÚBLICOS DE LA CIUDAD DE BUENOS AIRES, en virtud de la facultad que le confiere el artículo 10 inc. d) de la ley 20305, certifica únicamente que la firma y el sello que aparecen en la traducción adjunta concuerdan con los correspondientes al/a la Traductor/a Público/a SAUBIDET MARÍN, AGUSTINA que obran en los registros de esta institución, en el folio 307 del Tomo 14 en el idioma INGLÉS

Legalización número: **66505**

Buenos Aires, 06/10/2015

GUSTAVO A. SIGALOFF
JEFE DE LEGALIZACIONES
COLEGIO DE TRADUCTORES PÚBLICOS
DE LA CIUDAD DE BUENOS AIRES

ESTA LEGALIZACIÓN NO SE CONSIDERARÁ VÁLIDA SIN EL CORRESPONDIENTE TIMBRADO DE CONTROL EN LA ÚLTIMA HOJA DE LA TRADUCCIÓN ADJUNTA

Control interno: 26185266505

<Número Sade/Especial a asignar>

859 0425

By virtue of the authority vested in the COLEGIO DE TRADUCTORES PÚBLICOS DE LA CIUDAD DE BUENOS AIRES (Buenos Aires Sworn Translators Association) by Argentine law No. 20 305 section 10(d), I hereby CERTIFY that the seal and signature affixed on the attached translation are consistent with the seal and signature on file in our records.
The Colegio de Traductores Públicos de la Ciudad de Buenos Aires only certifies that the signature and seal on the translation are genuine; it will not attest to the contents of the document.
THIS CERTIFICATION WILL BE VALID ONLY IF IT BEARS THE PERTINENT CHECK STAMP ON THE LAST PAGE OF THE ATTACHED TRANSLATION.

Vu par le COLEGIO DE TRADUCTORES PÚBLICOS DE LA CIUDAD DE BUENOS AIRES (Ordre des Traducteurs Officiels de la ville de Buenos Aires), en vertu des attributions qui lui ont été accordées par l'article 10, alinéa d) de la Loi n° 20.305, pour la seule légalisation matérielle de la signature et du sceau du Traductor Público (Traducteur Officiel) apposés sur la traduction du document ci-joint, qui sont conformes à ceux déposés aux archives de cette Institution.
LE TIMBRE APPOSÉ SUR LA DERNIÈRE PAGE DE LA TRADUCTION FERA PREUVE DE LA VALIDITÉ DE LA LÉGALISATION.

Il COLEGIO DE TRADUCTORES PÚBLICOS DE LA CIUDAD DE BUENOS AIRES (Ordine dei Traduttori abilitati della Città di Buenos Aires) CERTIFICA ai sensi dell'articolo 10, lettera d) della legge 20.305 che la firma e il timbro apposti sulla qui unita traduzione sono conformi alla firma e al timbro del Traduttore abilitato depositati presso questo Ente. Non certifica il contenuto della traduzione sulla quale la certificazione è apposta.
LA VALIDITÀ DELLA PRESENTE CERTIFICAZIONE È SUBORDINATA ALL'APPOSIZIONE DEL TIMBRO DI CONTROLLO DEL CTPCBA SULL'ULTIMA PAGINA DELL'ALLEGATA TRADUZIONE.

Por meio desta legalização, o COLEGIO DE TRADUCTORES PÚBLICOS DE LA CIUDAD DE BUENOS AIRES (Colégio dos Tradutores Públicos da Cidade de Buenos Aires), no uso de suas atribuições e em conformidade com o artigo 10, alínea "d", da Lei 20.305, somente reconhece a assinatura e o carimbo do Tradutor Público que subscreve a tradução em anexo por semelhança com a assinatura e o carimbo arquivados nos registros desta instituição.
A PRESENTE LEGALIZAÇÃO SÓ TERÁ VALIDADE COM A CORRESPONDENTE CHANCELA MECÂNICA APOSTA NA ÚLTIMA FOLHA DA TRADUÇÃO.

COLEGIO DE TRADUCTORES PÚBLICOS DE LA CIUDAD DE BUENOS AIRES (Kammer der vereidigten Übersetzer der Stadt Buenos Aires). Kraft der Befugnisse, die ihr nach Art. 10 Abs. d) von Gesetz 20.305 zustehen, bescheinigt die Kammer hiermit lediglich die Übereinstimmung der Unterschrift und des Siegelabdruckes auf der beigefügten Übersetzung mit der entsprechenden Unterschrift und dem Siegelabdruck des vereidigten Übersetzers (Traductor Público) in unseren Registern.
DIE VORLIEGENDE ÜBERSETZUNG IST OHNE DEN ENTSPRECHENDEN GEBÜHRENSTEMPEL AUF DEM LETZTEN BLATT DER BEIGEFÜGTEN ÜBERSETZUNG NICHT GÜLTIG.

0425

TRADUCCIÓN PÚBLICA

ANEXO 6

PRECIOS FINALES

ANEXO 6

PRECIOS FINALES

Detalle de la Maquinaria de Mantenimiento Pesado

Número de orden	Descripción	Cantidad	Precio unitario (en U$S, CIF a Argentina)	Repuestos para dos años de funcionamiento (6% del precio de la máquina)	Total (U$S)
1	Máquina de detección de fallas de rieles y medición de vía (1676 mm)	1	8.141.000	1.835.820	32.432.820
2	Esmeriladora (1676 mm)	1	9.188.000		
3	Estabilizadora dinámica de vía (1676 mm)	1	2.739.000		
4	Bateadora (1676 mm)	1	3.061.000		
5	Reguladora de balasto (1676 mm)	1	1.048.000		
6	Camión de vía (1676 mm)	4	1.284.500		
7	Camión de vía (1000 mm)	1	1.282.000		
		subtotal	30.597.000		

El precio final incluye los siguientes conceptos: ----------

- Gancho de acople para trocha ancha de conformidad con la norma UIC 520 y cambio del gancho de acople para el camión de vía de trocha angosta. ----------
- La marca de los generadores cambia a Stamford o Yamaha. ----------
- Análisis de elementos finitos: pruebas de frecuencia y modos de vibración, y resistencia a la fatiga (incluida prueba de impacto a 36km/h). ----------
- Pruebas físicas de carga estática, seguridad estructural e impacto a 5 km/h. ----------
- Pruebas de toxicidad y de inflamabilidad para los componentes principales del interior de la cabina de acuerdo con la norma DIN 5510. ----------
- Parabrisas y vidriado lateral. ----------
- Sistema de freno pasó a ser marca KNORR CCB26 o Wabtech ----------
- PC industrial,USB2.0 ----------
- Registrador de eventos – HASLER TELOC 3000 (MR-1-2013-E2) ----------
- Radios ----------
- Software ----------
- Cambios en el diseño del camión de vía ----------

{En el encabezado, aparecen textos en idioma castellano y la leyenda Anexo 6, la fecha 19/08/2015 y la numeración de la página. Todas las hojas están inicialadas.} ----------

---

ES TRADUCCIÓN COMPLETA Y FIEL al castellano del documento adjunto redactado en inglés, al cual me remito. En Buenos Aires, a los 30 días de septiembre de 2015. La presente traducción consta de 2 páginas. ----------

COLEGIO DE TRADUCTORES PÚBLICOS DE LA CIUDAD DE BUENOS AIRES
Corresponde a la Legalización
Nº 655401
SERGIO ALEJANDRO IBRVASI

JULIA DANIELA CAMOZZI
Traductora Pública de Inglés
Mat. Tº XII Fº 487 Capital Federal
Inscrip. C.T.P.C.B.A. Nro. 4177

ANEXO II

0425

MOZZI
Inglés
Federal
ro. 4177

[redacted]

<Número Sade/Especial a asignar>

<Número página a asignar>

0425

COLEGIO DE TRADUCTORES PÚBLICOS DE LA CIUDAD DE BUENOS AIRES

República Argentina
Ley 20305

LEGALIZACIÓN

Por la presente, el COLEGIO DE TRADUCTORES PÚBLICOS DE LA CIUDAD DE BUENOS AIRES, en virtud de la facultad que le confiere el artículo 10 inc. d) de la ley 20305, certifica únicamente que la firma y el sello que aparecen en la traducción adjunta concuerdan con los correspondientes al/a la Traductor/a Público/a CAMOZZI, JULIA DANIELA que obran en los registros de esta institución, en el folio 487 del Tomo 12 en el idioma INGLÉS

Legalización número: **65540**

Buenos Aires, 02/10/2015

MARCELO F. SIGALOFF
Gerente de Legalizaciones
Colegio de Traductores Públicos
de la Ciudad de Buenos Aires

ESTA LEGALIZACIÓN NO SE CONSIDERARÁ VÁLIDA SIN EL CORRESPONDIENTE TIMBRADO DE CONTROL EN LA ÚLTIMA HOJA DE LA TRADUCCIÓN ADJUNTA

Control interno: 26145665540

<Número Sade/Especial a asignar>

042564

By virtue of the authority vested in the COLEGIO DE TRADUCTORES PÚBLICOS DE LA CIUDAD DE BUENOS AIRES (Buenos Aires Sworn Translators Association) by Argentine law No. 20 305 section 10(d), I hereby CERTIFY that the seal and signature affixed on the attached translation are consistent with the seal and signature on file in our records.
The Colegio de Traductores Públicos de la Ciudad de Buenos Aires only certifies that the signature and seal on the translation are genuine; it will not attest to the contents of the document.
THIS CERTIFICATION WILL BE VALID ONLY IF IT BEARS THE PERTINENT CHECK STAMP ON THE LAST PAGE OF THE ATTACHED TRANSLATION.

Vu par le COLEGIO DE TRADUCTORES PÚBLICOS DE LA CIUDAD DE BUENOS AIRES (Ordre des Traducteurs Officiels de la ville de Buenos Aires), en vertu des attributions qui lui ont été accordées par l'article 10, alinéa d) de la Loi n° 20.305, pour la seule légalisation matérielle de la signature et du sceau du Traductor Público (Traducteur Officiel) apposés sur la traduction du document ci-joint, qui sont conformes à ceux déposés aux archives de cette Institution.
LE TIMBRE APPOSÉ SUR LA DERNIÈRE PAGE DE LA TRADUCTION FERA PREUVE DE LA VALIDITÉ DE LA LÉGALISATION.

Il COLEGIO DE TRADUCTORES PÚBLICOS DE LA CIUDAD DE BUENOS AIRES (Ordine dei Traduttori abilitati della Città di Buenos Aires) CERTIFICA ai sensi dell'articolo 10, lettera d) della legge 20.305 che la firma e il timbro apposti sulla qui unita traduzione sono conformi alla firma e al timbro del Traduttore abilitato depositati presso questo Ente. Non certifica il contenuto della traduzione sulla quale la certificazione è apposta.
LA VALIDITÁ DELLA PRESENTE CERTIFICAZIONE È SUBORDINATA ALL'APPOSIZIONE DEL TIMBRO DI CONTROLLO DEL CTPCBA SULL'ULTIMA PAGINA DELL'ALLEGATA TRADUZIONE.

Por meio desta legalização, o COLEGIO DE TRADUCTORES PÚBLICOS DE LA CIUDAD DE BUENOS AIRES (Colégio dos Tradutores Públicos da Cidade de Buenos Aires), no uso de suas atribuições e em conformidade com o artigo 10, alínea "d", da Lei 20.305, somente reconhece a assinatura e o carimbo do Tradutor Público que subscreve a tradução em anexo por semelhança com a assinatura e o carimbo arquivados nos registros desta instituição.
A PRESENTE LEGALIZAÇÃO SÓ TERÁ VALIDADE COM A CORRESPONDENTE CHANCELA MECÂNICA APOSTA NA ÚLTIMA FOLHA DA TRADUÇÃO.

COLEGIO DE TRADUCTORES PÚBLICOS DE LA CIUDAD DE BUENOS AIRES (Kammer der vereidigten Übersetzer der Stadt Buenos Aires). Kraft der Befugnisse, die ihr nach Art. 10 Abs. d) von Gesetz 20.305 zustehen, bescheinigt die Kammer hiermit lediglich die Übereinstimmung der Unterschrift und des Siegelabdruckes auf der beigefügten Übersetzung mit der entsprechenden Unterschrift und dem Siegelabdruck des vereidigten Übersetzers (Traductor Público) in unseren Registern.
DIE VORLIEGENDE ÜBERSETZUNG IST OHNE DEN ENTSPRECHENDEN GEBÜHRENSTEMPEL AUF DEM LETZTEN BLATT DER BEIGEFÜGTEN ÜBERSETZUNG NICHT GÜLTIG.

TRADUCCIÓN PÚBLICA ----------

(Sobre el margen superior derecho en todas las páginas aparece un logo que reza: Hegenscheidt MFD). (Y en la parte inferior de todas las páginas aparecen tres firmas ilegibles)

Anexo -2.1----------

Especificaciones Técnicas de Torno de Rueda Bajo Piso U2000-400. ----------

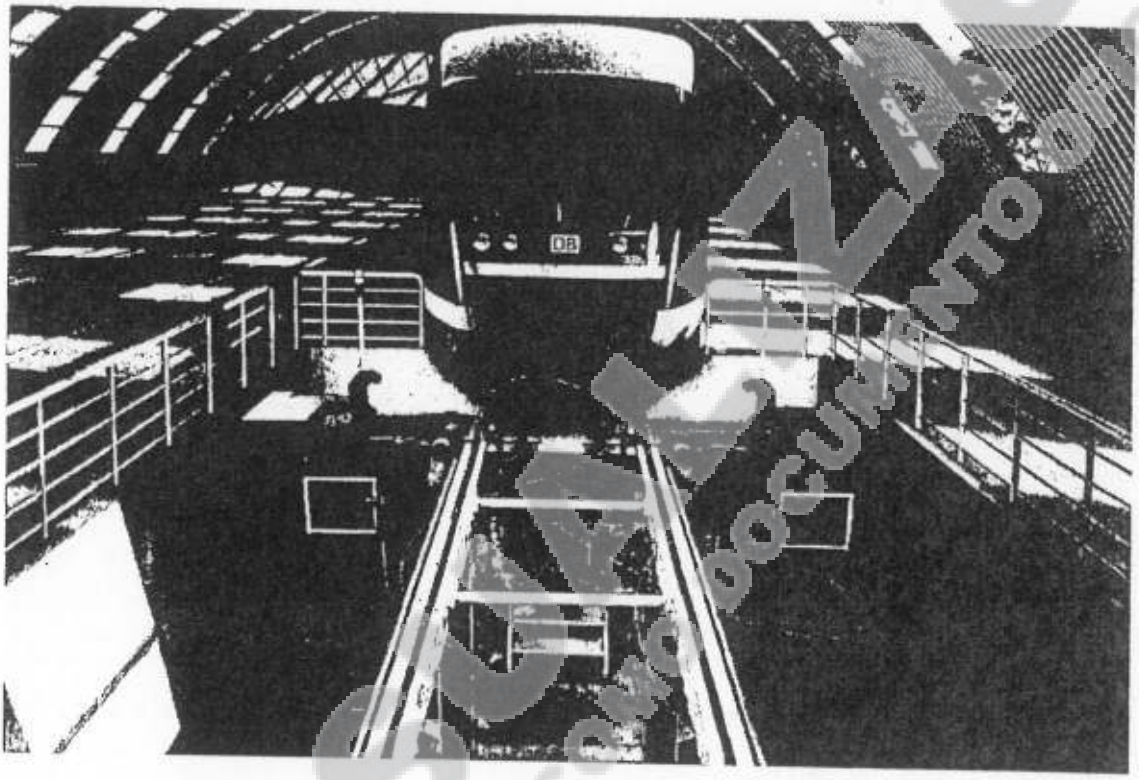

[Página Siguiente] ----------

Alcance operativo y rango de aplicación

General	El moderno torno de ruedas bajo piso no solo satisface toda demanda de condiciones de trabajo y requerimientos de precisión si no que su diseño también pretende satisfacer todo requerimiento futuro. Se trata de un torno de pares montados universal, dinámicamente rígido y amigable para el usuario. El funcionamiento de este torno representa el mayor estándar dentro del rango de tecnología de mecanizado de pares montados. Debido a su alta disponibilidad, su larga vida útil y sus bajos costos de mantenimiento, la máquina garantiza eficiencia económica óptima.

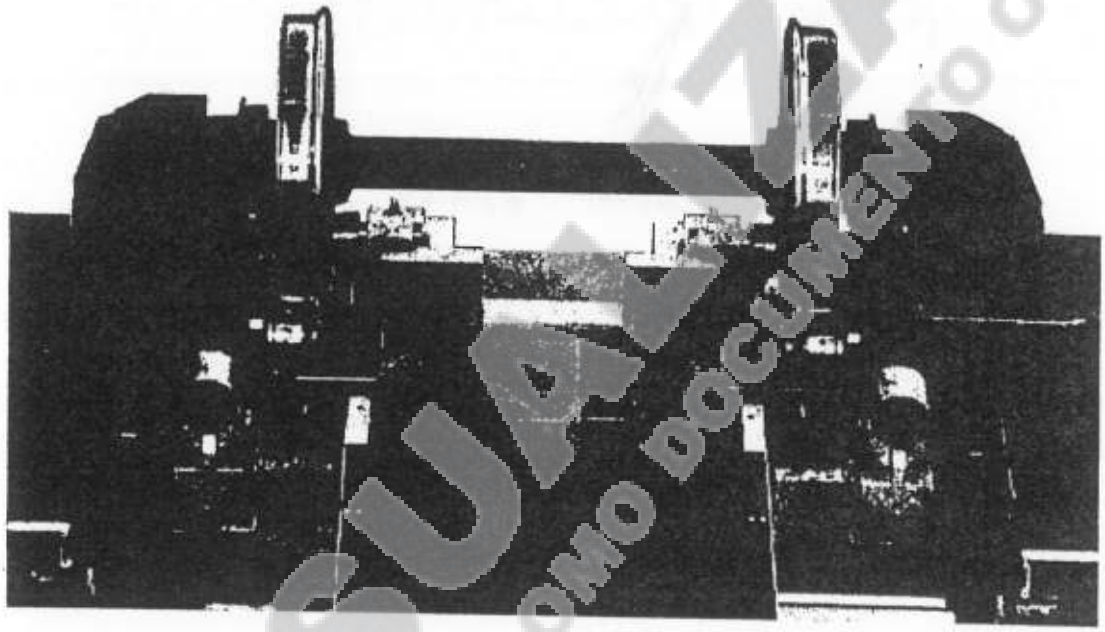

Funcionamiento	Los pares montados de trenes de alta velocidad, de trenes suburbanos al igual que de tranvías son reperfilados con la mayor precisión mediante los tornos de pares montados bajo piso controlados CNC, Hegenscheidt-MFD, sin importar si se encuentran en montados o desmontados en sus bogies.

[Página Siguiente]

Descripción	Los tornos de pares montados bajo piso se encuentran insertados en un pozo. Los pares montados que deben ser reperfilados son posicionados en el carril de alimentación (si todavía se encuentran montados) o mediante grúa (si se encuentran desmontados).

	A fin de llevar a cabo un reperfilado, los pares montados son conducidos a las bandas de rodamiento mediante dos ruedas a fricción por cada rueda. Con el objeto de lograr la más alta precisión mecanizada, tomando en cuenta una alta rigidez dinámica, los pares montados son centrados cajas de rodamientos de punta de eje. Luego, además, son guiados por las ruedas de guía axial en dirección axial. El juego de tornos bajo piso es recomendable para: - mecanización de perfiles y mecanización de caras internas de las ruedas, - torneado de bandas de rodadura hasta la parte superior de la pestaña y la cara posterior de la pestaña. - mecanización de discos de frenos montados sobre el eje interno y de discos de frenos montados sobre las ruedas (opción), La máquina se opera a través de un panel de control central a fin de que el operador posea acceso continuo a todas las funciones de la máquina a la vez que simultáneamente se encuentre en una posición de trabajo óptima. Durante la mecanización, se protege al operador de las virutas que vuelan. El sistema de mecanización automático libera al operador en gran medida y por lo tanto permite un fácil manejo de la máquina.

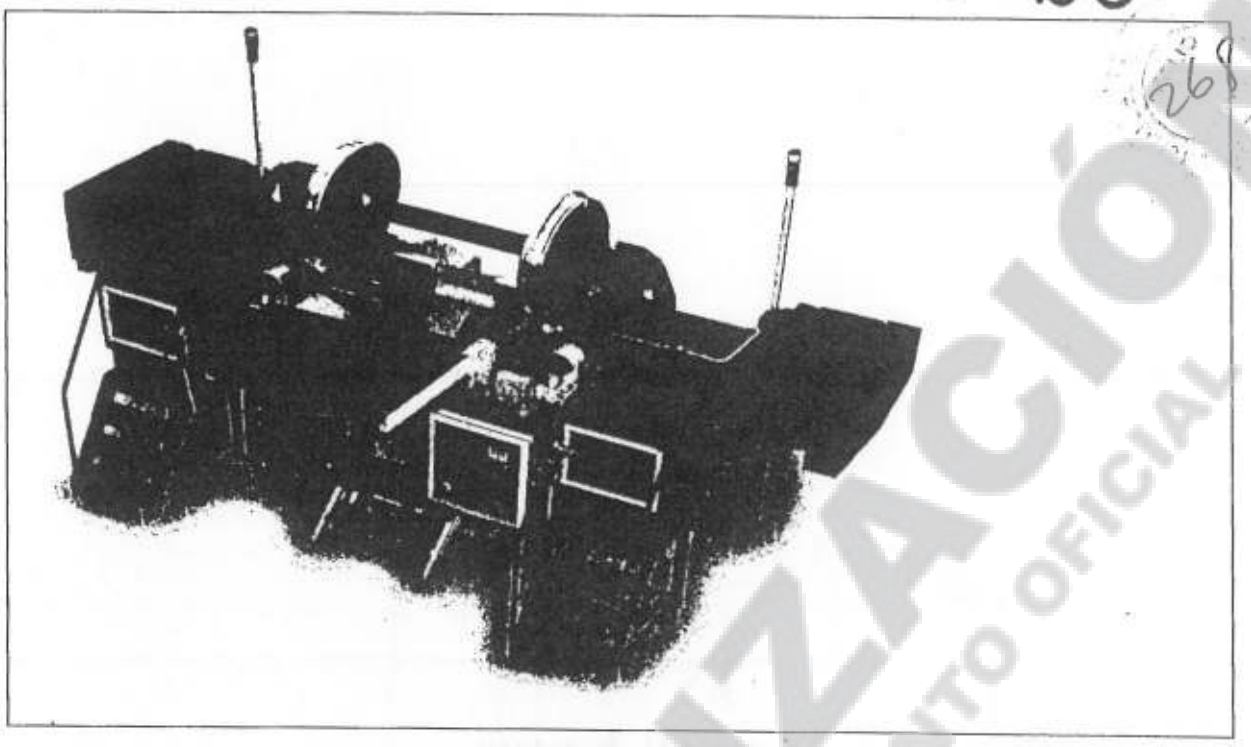

Máquina Básica ----------

Construcción de la máquina ----------

Componentes estándar	La máquina base es una unidad estándar controlada por CNC y diseñada para elevar, medir y maquinar un par montado junto con los módulos suplementarios específicos del cliente. Los siguientes componentes pertenecen a la unidad estándar - 2 columnas de máquina. - vigas transversales - 2 puestos de herramientas con posiciones integradas y sondeos de desgaste

[Página Siguiente] ----------

	- 2 unidades de medición de diámetro - 2 ejes de transmisión a fricción (rodillo transportador con unidad de transmisión), - 2 rodillos de guía laterales - equipamiento eléctrico - hidráulica,

	- recubrimiento de la máquina - el control CNC Sinumerik 840 DE, permite que Siemens controle en el lenguaje ofrecido (si estuviera disponible),

Componentes específicos del cliente o vehículo	- 2 unidades de centrado desde la caja de rodamiento con adaptadores (en máquina básica), - Sistema de eliminación de virutas, - Extensiones necesarias de acuerdo a la tarea de mecanización

Más opciones a fin de extender el rango operativo e incrementar el grado de automatización. ----------

	• Unidad de control anti-resbalamiento • Extracción de polvo y gases, • Programas de mecanización de discos de freno y juego de herramientas (opción) • Unidades de elevación operadas en forma hidráulica para elevar el segundo par montado, para pares montados acoplados con distancia de base de ruedas variable.

Información Técnica de la Máquina	Trocha .....1,000/1,435/1676 mm..... Diámetro máx. de ruedas .....350 mm Diámetro máx. de ruedas .....1400 mm Ancho min. de llantas .....85 mm

[Página Siguiente] ----------

	Ancho máx. de llantas .....145mm Distancia del centro min., acoplado .....1,300 mm Distancia del centro min., no acoplado 1,000 mm

	Largo de eje máx. a recibir .....2,165/2,600/2,841mm Largo de eje min. a recibir .....1,465/1,900/2,141 mm Máximo peso por eje en la maquina. .....400 kN Máximo peso por eje en la cinta transportadora ...400kN

Precisión de mecanización	Diferencia de diámetro máx de dos ruedas en un eje .....0.1mm [1] Diferencia de diámetro máx de cuatro ruedas en dos ejes .....0.3 mm [1] Diferencia de diámetro en la rueda (ovalidad) ....0.1mm [2, 4] Desviación de planicidad en la pestaña ..... 0.3mm [3, 4] Desviación de la geometría del perfil .....0.2mm [1] Terminación de la superficie, mecanización del perfil Rz < 60µm [1)] Pre-requisitos: igual precisión de corte en ambas ruedas, puntas de herramienta filosas y agarre preciso y firme de ambas cajas de punta de eje. Profundidad de corte que no exceda los 4 mm (2 cortes) [2)] Pre-requisitos: Medición del corte, pre-corte o perfil real de la rueda y puntas de herramienta filosas, condiciones de corte normal y centralización correcta de los pares montados. [3)] Pre-requisitos: parte plana de cara interna de llanta mejor 0,5 mm. [4)] En el caso de pares montados recubiertos con goma, el valor puede aumentar hasta 0.3 mm.

Información de la máquina	Valor de transmisión .....2 x 30kW

[Página Siguiente]

	Fuerza de corte (si carga del eje es suficiente) .....26kN Sección de corte máx. .....aprox.10mm² Velocidad de corte, mecanización de perfil ....30-120 m/min

	Velocidad de corte máx., nivel de medida de círculo....305 m/min Velocidad máxima del portaherramientas, longitudinal y liso 5 .....m/min rango de alimentación infinitamente variable de - a ...0 - 2.5..... .....mm/rev Distancia entre los rodillos de transmisión .....440mm Diámetro de los rodillos de transmisión .....220mm Máx. nivel de ruido de la máquina .....< 80 dB (A) (excepto por ruido de corte) Sistema de medición de la máquina .....lenguaje métrico Idioma: Pantalla CNC, visualización de menús, mensajes de error, documentación..... .....inglés ..... signos ....inglés

Información de conexión	Llevado a cabo según las normas VDE, EN y IEC. (Las disposiciones sobre equipamiento eléctrico brindadas por el comprador son tomadas en cuenta si son confirmadas). Voltaje de funcionamiento .....400V ..... Tolerancia de voltaje .....-10 +6% Frecuencia en la red .....50Hz Tipo en la red.....TN Energía conectada, dependiendo del equipo.. aprox.96 kVA Peso de la máquina .....aprox. 17t Espacio requerido para instalar la máquina ...aprox. 6 x 7m Profundidad de pozo de fundación requerido ...aprox. 2.3m

Transmisiones principales	

[Página Siguiente]

	Dos motores asincrónicos de tres fases con control de

	frecuencia, Clase de protección .....IP 54 Potencia total .....aprox.60kW Potencia por motor (PS1-100%).....aprox. 30kW Resistencia sobrecarga en operaciones a corto plazo PS6-60% * (por motor).....37.5kW PS6-40% * (por motor).....45.0kW Rango de velocidad: total .....1-1.500-6.500 min^{-1} Torque continuo .....1-1.500 min^{-1} Potencia continua .....1.500-6.500 min^{-1} ..... - Control de motor a través de inversor, - ventilador de aire forzado, - frenado eléctrico, - repetidor de velocidad, - ajuste remoto e indicador remoto.

[Página Siguiente]

Aclaración	PS6 – operación continua con carga intermitente. (Tiempo de referencia = 10 minutos de ac. a DIN VDE 0530)
Motores de avance	Cuatro servo motores altamente dinámicos, Continuamente ajustables a movimientos de nutrición y movimientos rápidos, Potencia por motor aprox. 2.1 kW, a 2000 1/min, clase de protección: IP54
Motobomba Unidad hidráulica	motor de tres fases potencia .....aprox. 5kW a 1800 1/min

0425

Bombas auxiliares	clase de protección: IP 44 un juego de propulsores, ventiladores etc., clase de protección: IP 44 / 54.

- Cada máquina vendrá pre-seteada a cada ancho de vía de acuerdo al siguiente detalle:
- Una máquina a un ancho de vía de 1000mm ----------
- Una máquina a un ancho de vía de 1435mm ----------
- Una máquina a un ancho de vía de 1676 mm ----------

Certifico que lo que antecede es traducción fiel al idioma español, del documento en idioma inglés, que he tenido ante mí, y al cual me remito. En Buenos Aires, el día 2 de octubre del año dos mil quince. ----------

COLEGIO DE TRADUCTORES PÚBLICOS
DE LA CIUDAD DE BUENOS AIRES
Corresponde a la Legalización
Nº 66110/15
PRIDOLA CRISTINA GUELFI

AGUSTINA SAUBIDET MARIN
TRADUCTORA PÚBLICA
INGLES
MAT. To. XIV Fo. 107 CAPITAL FEDERAL
INSCRIP. C.T.P.C.B.A. Nº 4993

ANEXO II

0425

ANEXO II

0425

COLEGIO DE TRADUCTORES PÚBLICOS DE LA CIUDAD DE BUENOS AIRES

República Argentina
Ley 20305

LEGALIZACIÓN

Por la presente, el COLEGIO DE TRADUCTORES PÚBLICOS DE LA CIUDAD DE BUENOS AIRES, en virtud de la facultad que le confiere el artículo 10 inc. d) de la ley 20305, certifica únicamente que la firma y el sello que aparecen en la traducción adjunta concuerdan con los correspondientes al/a la Traductor/a Público/a SAUBIDET MARÍN, AGUSTINA que obran en los registros de esta institución, en el folio 307 del Tomo 14 en el idioma INGLÉS

Legalización número: **66110**

Buenos Aires, 05/10/2015

GUSTAVO KUSIGALOFF
JEFE DE LEGALIZACIONES
COLEGIO DE TRADUCTORES PUBLICOS
DE LA CIUDAD DE BUENOS AIRES

ESTA LEGALIZACIÓN NO SE CONSIDERARÁ VÁLIDA SIN EL CORRESPONDIENTE TIMBRADO DE CONTROL EN LA ÚLTIMA HOJA DE LA TRADUCCIÓN ADJUNTA

Control interno: 26169266110

<Número Sade/Especial a asignar>

0425 276

By virtue of the authority vested in the COLEGIO DE TRADUCTORES PÚBLICOS DE LA CIUDAD DE BUENOS AIRES (Buenos Aires Sworn Translators Association) by Argentine law No. 20 305 section 10(d), I hereby CERTIFY that the seal and signature affixed on the attached translation are consistent with the seal and signature on file in our records.
The Colegio de Traductores Públicos de la Ciudad de Buenos Aires only certifies that the signature and seal on the translation are genuine; it will not attest to the contents of the document.
THIS CERTIFICATION WILL BE VALID ONLY IF IT BEARS THE PERTINENT CHECK STAMP ON THE LAST PAGE OF THE ATTACHED TRANSLATION.

Vu par le COLEGIO DE TRADUCTORES PÚBLICOS DE LA CIUDAD DE BUENOS AIRES (Ordre des Traducteurs Officiels de la ville de Buenos Aires), en vertu des attributions qui lui ont été accordées par l'article 10, alinéa d) de la Loi n° 20.305, pour la seule légalisation matérielle de la signature et du sceau du Traductor Público (Traducteur Officiel) apposés sur la traduction du document ci-joint, qui sont conformes à ceux déposés aux archives de cette Institution.
LE TIMBRE APPOSÉ SUR LA DERNIÈRE PAGE DE LA TRADUCTION FERA PREUVE DE LA VALIDITÉ DE LA LÉGALISATION.

Il COLEGIO DE TRADUCTORES PÚBLICOS DE LA CIUDAD DE BUENOS AIRES (Ordine dei Traduttori abilitati della Città di Buenos Aires) CERTIFICA ai sensi dell'articolo 10, lettera d) della legge 20.305 che la firma e il timbro apposti sulla qui unita traduzione sono conformi alla firma e al timbro del Traduttore abilitato depositati presso questo Ente. Non certifica il contenuto della traduzione sulla quale la certificazione è apposta.
LA VALIDITÁ DELLA PRESENTE CERTIFICAZIONE È SUBORDINATA ALL'APPOSIZIONE DEL TIMBRO DI CONTROLLO DEL CTPCBA SULL'ULTIMA PAGINA DELL'ALLEGATA TRADUZIONE.

Por meio desta legalização, o COLEGIO DE TRADUCTORES PÚBLICOS DE LA CIUDAD DE BUENOS AIRES (Colégio dos Tradutores Públicos da Cidade de Buenos Aires), no uso de suas atribuições e em conformidade com o artigo 10, alínea "d", da Lei 20.305, somente reconhece a assinatura e o carimbo do Tradutor Público que subscreve a tradução em anexo por semelhança com a assinatura e o carimbo arquivados nos registros desta instituição.
A PRESENTE LEGALIZAÇÃO SÓ TERÁ VALIDADE COM A CORRESPONDENTE CHANCELA MECÂNICA APOSTA NA ÚLTIMA FOLHA DA TRADUÇÃO.

COLEGIO DE TRADUCTORES PÚBLICOS DE LA CIUDAD DE BUENOS AIRES (Kammer der vereidigten Übersetzer der Stadt Buenos Aires). Kraft der Befugnisse, die ihr nach Art. 10 Abs. d) von Gesetz 20.305 zustehen, bescheinigt die Kammer hiermit lediglich die Übereinstimmung der Unterschrift und des Siegelabdruckes auf der beigefügten Übersetzung mit der entsprechenden Unterschrift und dem Siegelabdruck des vereidigten Übersetzers (Traductor Público) in unseren Registern.
DIE VORLIEGENDE ÜBERSETZUNG IST OHNE DEN ENTSPRECHENDEN GEBÜHRENSTEMPEL AUF DEM LETZTEN BLATT DER BEIGEFÜGTEN ÜBERSETZUNG NICHT GÜLTIG.

TRADUCCIÓN PÚBLICA ----------

Anexo 2.2 ----------

Especificaciones Técnicas de los Tornos Verticales ----------

Partes destacadas ----------

1. La máquina herramienta es apropiada para mecanizar la totalidad de las industrias, y puede ser utilizada para el torneado rugoso y fino de superficies cilíndricas externas, superficies cónicas, etapa final, realización de muescas y cortes. Es especialmente apropiada para el procesamiento CNC de perfiles de los velos y las bandas de rodamiento de la llanta, del total de los juegos de locomotoras y vehículos del ferrocarril. ----------

2. La fundición de la máquina herramienta, se realiza por un molde de arena por cera perdida de alta calidad, para que la pieza sea de alta calidad y durable tras el tratamiento de envejecimiento. ----------

3. El control de alimentación automático se lleva a cabo utilizando el sistema alemán SIEMENS-828D CNC. ----------

4. El control del amperaje elevado del torno es llevado a cabo por un controlador programable (PLC). ----------

5. Un sistema de lubricación central está instalado en el torno a fin de asegurar que cada parte de transmisión de la máquina pueda ser correctamente lubricada. ----------

6. La puerta de seguridad de la maquina brinda protección adecuada a la máquina herramienta y a su funcionamiento. ----------

7. La máquina herramienta se encuentra pre-seteada con un programa de procesamiento de perfiles de los velos y las bandas de rodadura de la llanta del total de los juegos de ruedas de locomotoras y vehículos del ferrocarril.----------

Disposiciones, Normas y Estándares----------

--- En cuanto a Calidad, Seguridad y Medio Ambiente, el rango de provisión que nos proponemos cumplirá con las normas, disposiciones y estándares vigentes: ----------

- Disposiciones y estándares relevantes GB /TB ----------

Rango de Aplicación ----------

--- Es especialmente apropiada para el procesamiento de perfiles CNC de los velos y las bandas de rodadura de la llanta del total de los juegos de ruedas de locomotoras y vehículos del ferrocarril, y es apropiado para el ...----------

----------1/2----------

(Sobre el margen inferior derecho aparecen tres firmas ilegibles) ----------

---

[Página Siguiente] ----------

... procesamiento CNC de agujeros internos y terminaciones de grupos de ruedas de vehículos y locomotoras. ----------

Parámetros Técnicos ----------

Nombre	Artículo	参数 Parámetro
Parámetros técnicos Principales	Diámetro de Mesa	1400 mm
	Diámetro de Torneado	1600mm
	Diámetro máximo exterior de rueda sólida	1250 mm

	Diámetro mínimo de buje de rueda sólido	145mm
	Peso máximo de pieza de trabajo	8T
	Altura máxima de pieza de trabajo	1600mm
	Velocidad variable	3.15-315rpm
	torque máximo	20kNm
	Diámetro de rodamiento	1200mm 1400mm
	Fuerza de corte máxima de cortadora vertical	40kN
	Precisión	0.03mm

----------2/2----------

----------(Sobre el margen inferior derecho aparecen tres firmas ilegibles)

Certifico que lo que antecede es traducción fiel al idioma español, del documento en idioma inglés, que he tenido ante mí, y al cual me remito. En Buenos Aires, el día 2 de octubre del año dos mil quince. ----------

COLEGIO DE TRADUCTORES PUBLICOS
DE LA CIUDAD DE BUENOS AIRES
Corresponde a la Legalización
Nº 66111/15
PRISCILA CRISTINA CUELFFI

AGUSTINA SAUBIDET MARIN
TRADUCTORA PÚBLICA
INGLES
MAT. To. XIV Fo. 107 CAPITAL FEDERAL
INSCRIP. C.T.P.C.B.A. Nº 4993

ANEXO II

0425

ANEXO II

0425

COLEGIO DE TRADUCTORES PÚBLICOS DE LA CIUDAD DE BUENOS AIRES

República Argentina
Ley 20305

LEGALIZACIÓN

Por la presente, el COLEGIO DE TRADUCTORES PÚBLICOS DE LA CIUDAD DE BUENOS AIRES, en virtud de la facultad que le confiere el artículo 10 inc. d) de la ley 20305, certifica únicamente que la firma y el sello que aparecen en la traducción adjunta concuerdan con los correspondientes al/a la Traductor/a Público/a SAUBIDET MARÍN, AGUSTINA que obran en los registros de esta institución, en el folio 307 del Tomo 14 en el idioma INGLÉS

Legalización número: **66111**

Buenos Aires, 05/10/2015

GUSTAVO A. SIGALOFF
JEFE DE LEGALIZACIONES
COLEGIO DE TRADUCTORES PÚBLICOS
DE LA CIUDAD DE BUENOS AIRES

ESTA LEGALIZACIÓN NO SE CONSIDERARÁ VÁLIDA SIN EL CORRESPONDIENTE TIMBRADO DE CONTROL EN LA ÚLTIMA HOJA DE LA TRADUCCIÓN ADJUNTA

Control interno: 26169266111

<Número Sade/Especial a asignar>

ANEXO II

0425

By virtue of the authority vested in the COLEGIO DE TRADUCTORES PÚBLICOS DE LA CIUDAD DE BUENOS AIRES (Buenos Aires Sworn Translators Association) by Argentine law No. 20 305 section 10(d), I hereby CERTIFY that the seal and signature affixed on the attached translation are consistent with the seal and signature on file in our records.
The Colegio de Traductores Públicos de la Ciudad de Buenos Aires only certifies that the signature and seal on the translation are genuine; it will not attest to the contents of the document.
THIS CERTIFICATION WILL BE VALID ONLY IF IT BEARS THE PERTINENT CHECK STAMP ON THE LAST PAGE OF THE ATTACHED TRANSLATION.

Vu par le COLEGIO DE TRADUCTORES PÚBLICOS DE LA CIUDAD DE BUENOS AIRES (Ordre des Traducteurs Officiels de la ville de Buenos Aires), en vertu des attributions qui lui ont été accordées par l'article 10, alinéa d) de la Loi n° 20.305, pour la seule légalisation matérielle de la signature et du sceau du Traductor Público (Traducteur Officiel) apposés sur la traduction du document ci-joint, qui sont conformes à ceux déposés aux archives de cette Institution.
LE TIMBRE APPOSÉ SUR LA DERNIÈRE PAGE DE LA TRADUCTION FERA PREUVE DE LA VALIDITÉ DE LA LÉGALISATION.

Il COLEGIO DE TRADUCTORES PÚBLICOS DE LA CIUDAD DE BUENOS AIRES (Ordine dei Traduttori abilitati della Città di Buenos Aires) CERTIFICA ai sensi dell'articolo 10, lettera d) della legge 20.305 che la firma e il timbro apposti sulla qui unita traduzione sono conformi alla firma e al timbro del Traduttore abilitato depositati presso questo Ente. Non certifica il contenuto della traduzione sulla quale la certificazione è apposta.
LA VALIDITÁ DELLA PRESENTE CERTIFICAZIONE È SUBORDINATA ALL'APPOSIZIONE DEL TIMBRO DI CONTROLLO DEL CTPCBA SULL'ULTIMA PAGINA DELL'ALLEGATA TRADUZIONE.

Por meio desta legalização, o COLEGIO DE TRADUCTORES PÚBLICOS DE LA CIUDAD DE BUENOS AIRES (Colégio dos Tradutores Públicos da Cidade de Buenos Aires), no uso de suas atribuições e em conformidade com o artigo 10, alínea "d", da Lei 20.305, somente reconhece a assinatura e o carimbo do Tradutor Público que subscreve a tradução em anexo por semelhança com a assinatura e o carimbo arquivados nos registros desta instituição.
A PRESENTE LEGALIZAÇÃO SÓ TERÁ VALIDADE COM A CORRESPONDENTE CHANCELA MECÂNICA APOSTA NA ÚLTIMA FOLHA DA TRADUÇÃO.

COLEGIO DE TRADUCTORES PÚBLICOS DE LA CIUDAD DE BUENOS AIRES (Kammer der vereidigten Übersetzer der Stadt Buenos Aires). Kraft der Befugnisse, die ihr nach Art. 10 Abs. d) von Gesetz 20.305 zustehen, bescheinigt die Kammer hiermit lediglich die Übereinstimmung der Unterschrift und des Siegelabdruckes auf der beigefügten Übersetzung mit der entsprechenden Unterschrift und dem Siegelabdruck des vereidigten Übersetzers (Traductor Público) in seinen Registern.
DIE VORLIEGENDE ÜBERSETZUNG IST OHNE DEN ENTSPRECHENDEN GEBÜHRENSTEMPEL AUF DEM LETZTEN BLATT DER BEIGEFÜGTEN ÜBERSETZUNG NICHT GÜLTIG.

0425

MARIN
LICA
L FEDERAL
Nº 4993

TRADUCCIÓN PÚBLICA ----------

Anexo 2.3 ----------

Especificaciones Técnicas de Prensa de Montaje de Ruedas ----------

Partes destacadas ----------

1. La prensa de montaje de ruedas de ferrocarril es recomendable para el montaje y desarme de las ruedas y ejes en pares montados de varios modelos de locomotoras nuevas y de locomotoras recicladas, de vagones de pasajeros y de vagones de carga. El equipo se compone de estructuras razonables, buena rigidez, un amplio rango de aplicación, alta eficiencia de producción, desempeño confiable, operación simple y fácil mantenimiento. ----------

2. Se trata de una máquina multiusos con un amplio espectro de aplicación y puede llevar a cabo montaje y extracción. ----------

3. La prensa de montaje de ruedas se compone de estructuras avanzadas, estado de estrés razonable, alta rigidez, componentes tratados y buena estabilidad. ----------

4. La interface del sistema de control se encuentra diseñada para resultar fácil para las operaciones humanas, y por lo tanto, la curva de prensada puede ser registrada, almacenada o puede imprimirse. ----------

Normas, Disposiciones y Principios ----------

Respecto a la Calidad, Seguridad y Medio Ambiente, el alcance de provisiones que nos proponemos cumplirá con las normas, disposiciones y principios vigentes: ----------

GB /TB normas y disposiciones relevantes ----------

Alcance de Aplicación ----------

--- La prensa de montaje de ruedas es recomendable para el montaje y desarme de ruedas y ejes en pares montados de varios modelos de locomotoras nuevas y de locomotoras recicladas, de vagones de pasajeros y de vagones de carga que poseen anchos de vías de 1000mm-1435mm-1676mm. ----------

Parámetros Técnicos ----------

Vías	Ancho de Vías	1000 mm -1435 mm -1676mm
Características principales	Máxima fuerza	350Tn
	Diámetro de Rueda	Max. 1250 mm
	Largo de eje máx.	2600 mm
	Largo de eje mín.	1500mm

	Variación de largo de eje	1500—2600 mm
Parámetros técnicos	Velocidad de prensado	Max. 300mm/min – Min. 30 mm/min

----------1/2----------

(Sobre el margen inferior derecho aparecen tres firmas ilegibles). ----------

[Página Siguiente] ----------

	Total energía de la fuente de energía	Aprox. 38KW, 380V tres fases AC
	Masa	Aprox. 30000 kg

Cada máquina vendrá pre-seteada a cada ancho de vía de acuerdo al siguiente detalle: ---------

- Una máquina a un ancho de vía de 1000mm ----------
- Una máquina a un ancho de vía de 1435mm ----------
- Una máquina a un ancho de vía de 1676 mm ----------

----------2/2----------

(Sobre el margen inferior derecho aparecen tres firmas ilegibles). ----------

Certifico que lo que antecede es traducción fiel al idioma español, del documento en idioma inglés, que he tenido ante mí, y al cuál me remito. En Buenos Aires, el día 2 de octubre del año dos mil quince. ----------

COLEGIO DE TRADUCTORES PÚBLICOS DE LA CIUDAD DE BUENOS AIRES
Corresponde a la Legalización
Nº 66112/15
PRISCILA CRISTINA GUELFFI

AGUSTINA SAUBIDET MARIN
TRADUCTORA PÚBLICA
INGLES
MAT. To. XIV Fo. 107 CAPITAL FEDERAL
INSCRIP. C.T.P.C.B.A. Nº 4993

ANEXO II

[redacted]

0425

0425 286

COLEGIO DE TRADUCTORES PÚBLICOS DE LA CIUDAD DE BUENOS AIRES

República Argentina
Ley 20305

LEGALIZACIÓN

Por la presente, el COLEGIO DE TRADUCTORES PÚBLICOS DE LA CIUDAD DE BUENOS AIRES, en virtud de la facultad que le confiere el artículo 10 inc. d) de la ley 20305, certifica únicamente que la firma y el sello que aparecen en la traducción adjunta concuerdan con los correspondientes al/a la Traductor/a Público/a SAUBIDET MARÍN, AGUSTINA que obran en los registros de esta institución, en el folio 307 del Tomo 14 en el idioma INGLÉS

Legalización número: **66112**

Buenos Aires, 05/10/2015

GUSTAVO A. SIGALOFF
JEFE DE LEGALIZACIONES
COLEGIO DE TRADUCTORES PÚBLICOS
DE LA CIUDAD DE BUENOS AIRES

ESTA LEGALIZACIÓN NO SE CONSIDERARÁ VÁLIDA SIN EL CORRESPONDIENTE TIMBRADO DE CONTROL EN LA ÚLTIMA HOJA DE LA TRADUCCIÓN ADJUNTA

Control interno: 26169266112

<Número Sade/Especial a asignar>

0425

By virtue of the authority vested in the COLEGIO DE TRADUCTORES PÚBLICOS DE LA CIUDAD DE BUENOS AIRES (Buenos Aires Sworn Translators Association) by Argentine law No. 20 305 section 10(d), I hereby CERTIFY that the seal and signature affixed on the attached translation are consistent with the seal and signature on file in our records.
The Colegio de Traductores Públicos de la Ciudad de Buenos Aires only certifies that the signature and seal on the translation are genuine; it will not attest to the contents of the document.
THIS CERTIFICATION WILL BE VALID ONLY IF IT BEARS THE PERTINENT CHECK STAMP ON THE LAST PAGE OF THE ATTACHED TRANSLATION.

Vu par le COLEGIO DE TRADUCTORES PÚBLICOS DE LA CIUDAD DE BUENOS AIRES (Ordre des Traducteurs Officiels de la ville de Buenos Aires), en vertu des attributions qui lui ont été accordées par l'article 10, alinéa d) de la Loi n° 20.305, pour la seule légalisation matérielle de la signature et du sceau du Traductor Público (Traducteur Officiel) apposés sur la traduction du document ci-joint, qui sont conformes à ceux déposés aux archives de cette Institution.
LE TIMBRE APPOSÉ SUR LA DERNIÈRE PAGE DE LA TRADUCTION FERA PREUVE DE LA VALIDITÉ DE LA LÉGALISATION.

Il COLEGIO DE TRADUCTORES PÚBLICOS DE LA CIUDAD DE BUENOS AIRES (Ordine dei Traduttori abilitati della Città di Buenos Aires) CERTIFICA ai sensi dell'articolo 10, lettera d) della legge 20.305 che la firma e il timbro apposti sulla qui unita traduzione sono conformi alla firma e al timbro del Traduttore abilitato depositati presso questo Ente. Non certifica il contenuto della traduzione sulla quale la certificazione è apposta.
LA VALIDITÁ DELLA PRESENTE CERTIFICAZIONE È SUBORDINATA ALL'APPOSIZIONE DEL TIMBRO DI CONTROLLO DEL CTPCBA SULL'ULTIMA PAGINA DELL'ALLEGATA TRADUZIONE.

Por meio desta legalização, o COLEGIO DE TRADUCTORES PÚBLICOS DE LA CIUDAD DE BUENOS AIRES (Colégio dos Tradutores Públicos da Cidade de Buenos Aires), no uso de suas atribuições e em conformidade com o artigo 10, alínea "d", da Lei 20.305, somente reconhece a assinatura e o carimbo do Tradutor Público que subscreve a tradução em anexo por semelhança com a assinatura e o carimbo arquivados nos registros desta instituição.
A PRESENTE LEGALIZAÇÃO SÓ TERÁ VALIDADE COM A CORRESPONDENTE CHANCELA MECÂNICA APOSTA NA ÚLTIMA FOLHA DA TRADUÇÃO.

COLEGIO DE TRADUCTORES PÚBLICOS DE LA CIUDAD DE BUENOS AIRES (Kammer der vereidigten Übersetzer der Stadt Buenos Aires). Kraft der Befugnisse, die ihr nach Art. 10 Abs. d) von Gesetz 20.305 zustehen, bescheinigt die Kammer hiermit lediglich die Übereinstimmung der Unterschrift und des Siegelabdruckes auf der beigefügten Übersetzung mit der entsprechenden Unterschrift und dem Siegelabdruck des vereidigten Übersetzers (Traductor Público) in unserem Register.
DIE VORLIEGENDE ÜBERSETZUNG IST OHNE DEN ENTSPRECHENDEN GEBÜHRENSTEMPEL AUF DEM LETZTEN BLATT DER BEIGEFÜGTEN ÜBERSETZUNG NICHT GÜLTIG.

TRADUCCIÓN PÚBLICA ----------

Anexo 2.4 ----------

Especificaciones Técnicas de Torno de Rueda ----------

Partes destacadas ----------

1. Un equipamiento especial apropiado para aros y rodaduras sobre pares montados de varios modelos de vehículos de pasajeros y de carga, locomotoras diesel, que poseen anchos de vías de 1000mm-1435mm-1676mm. ----------

2. La maquina adopta el circuito controlador (PLC), programable, avanzado, AC servo control CNC, combinado con el procesamiento de perfiles del sistema AC servo CNC a fin de que el nivel técnico, amplio, de esta fresadora alcance el nivel del torno de la rueda CNC más avanzado tanto en casa como en el exterior. ----------

3. La maquina puede realizar la evaluación por perfil y la reparación requerida por varias clases de tecnologías de pares montados. ----------

4. Los tipos de evaluación por perfil de la fresadora, controlados automáticamente, incluyen LM-32, LM-30, LM-28, LM-26 and LMA, y otras formas de pares montados requeridas por los usuarios. ----------

5. La herramienta de corte es una herramienta intercambiable, poderosa, de agarre, mecánico. ----------

6. La maquina posee un auto-diagnóstico que detecta fallas y funciones de pantalla. -----

Disposiciones, Normas y Principios. ----------

--- En cuanto a la Calidad, Seguridad y Medio Ambiente, el alcance de suministro que nos proponemos lograr cumplirá con las normas, disposiciones y estándares vigentes. ----------

- Normas y principios relevantes GB /TB ----------

Alcance de la Aplicación ----------

--- Se recomienda a fin de tornear aros y rodaduras en pares montados de varios modelos de

locomotoras eléctricas, locomotoras diesel, vehículos de carga y de pasajeros y vehículos urbanos ferroviarios que poseen anchos de vías de 1000mm-1435mm-1676mm. ----------

El proceso de torneado se logra por la parte superior del torno y es llevado a cabo por un sistema de descanso de corte CNC. ----------

----------1/3----------

(Sobre el margen inferior derecho aparecen tres firmas ilegibles) ----------

---

[Página Siguiente] ----------

La viruta de hierro puede desecharse a través de una máquina clástica y un instrumento que remueve fragmentos, para ser transportados al contenedor de fragmentos sobre el pozo. -------

Parámetros Técnicos ----------

Vía	Ancho de vías	1000 mm -1435 mm -1676mm
Eje	Largo de Eje máx.	2610 mm
	Largo de Eje mín.	1700mm
	Peso máx. de la pieza de trabajo	5000kg
Ruedas	Diámetro de Ruedas en la banda de rodadura	650 - 1300 mm
	Ancho de ruedas	120 - 140 mm
Parámetros de procesamiento de	Forma de procesamiento de perfiles	Procesamiento de perfil CNC Automático y

tecnología		procesamiento de perfil local, segmentado.
	Tiempo de procesamiento de perfil, total, de ruedas	6min ~ 20min/6min ~ 20min/procesamiento de perfil
	Profundidad máxima de mecanismo de alimentación de corte	≤8mm
	Normas de implementación	Normas TB China
Parámetros precisos de mecanizado de partes	Diferencia de diámetro de rueda del mismo componente	≤0.20mm
	Diferencia de forma de perfil de rueda	≤0.20mm
	Diferencia de grado de rodamiento circular	≤0.20mm
	Excentricidad	≤0.20mm
	Excentricidad del lado interno del juego de ruedas	≤0.30mm
	Rugosidad de la superficie	≤6.3μm
Medio ambiente de trabajo aplicado	Altitud	≤2500m
	Temperatura de trabajo ambiental	-5℃~45℃
	Humedad Relativa	≤90%

----------2/3----------

(Sobre el margen inferior derecho aparecen tres firmas ilegibles) ----------

[Página Siguiente] ----------

---- La cinta de transporte de ruedas en un taller se conecta con una cinta de carga y descarga de tornos, el par montado a procesar llega a la cinta de carga y descarga del torno a través de la cinta de transporte de ruedas del taller, y el juego de ruedas a procesar es automáticamente asegurado por una rueda hidráulica automática del juego de tornos, y luego el juego de ruedas procesado es descargado en forma automática y vuelve a la cinta de transporte del taller a través de la cinta de carga y descarga de tornos. ----------

--- Cada máquina viene pre-seteada a cada ancho de vía de acuerdo al siguiente detalle: -------

- Una máquina a un ancho de vías de 1000mm ----------
- Una máquina a un ancho de vías de 1435mm ----------
- Una máquina a un ancho de vías de 1676 mm ----------

----------3/3----------

(Sobre el margen inferior derecho aparecen tres firmas ilegibles) ----------

---

Certifico que lo que antecede es traducción fiel al idioma español, del documento en idioma inglés, que he tenido ante mí, y al cual me remito. En Buenos Aires, el día 2 de octubre del año dos mil quince. ----------

COLEGIO DE TRADUCTORES PÚBLICOS
DE LA CIUDAD DE BUENOS AIRES
Corresponde a la Legalización
Nº 66114/15
PRISCILA CRISTINA GUELFFI

AGUSTINA SAUBIDET MARIN
TRADUCTORA PÚBLICA
INGLES
MAT. To. XIV Fo. 107 CAPITAL FEDERAL
INSCRIP. C.T.P.C.B.A. Nº 4993

ANEXO II

0425

ANEXO II

0425

COLEGIO DE TRADUCTORES PÚBLICOS DE LA CIUDAD DE BUENOS AIRES

República Argentina
Ley 20305

LEGALIZACIÓN

Por la presente, el COLEGIO DE TRADUCTORES PÚBLICOS DE LA CIUDAD DE BUENOS AIRES, en virtud de la facultad que le confiere el artículo 10 inc. d) de la ley 20305, certifica únicamente que la firma y el sello que aparecen en la traducción adjunta concuerdan con los correspondientes al/a la Traductor/a Público/a SAUBIDET MARÍN, AGUSTINA que obran en los registros de esta institución, en el folio 307 del Tomo 14 en el idioma INGLÉS

Legalización número: **66114**

Buenos Aires, 05/10/2015

GUSTAVO A. SIGALOFF
JEFE DE LEGALIZACIONES
COLEGIO DE TRADUCTORES PÚBLICOS
DE LA CIUDAD DE BUENOS AIRES

ESTA LEGALIZACIÓN NO SE CONSIDERARÁ VÁLIDA SIN EL CORRESPONDIENTE TIMBRADO DE CONTROL EN LA ÚLTIMA HOJA DE LA TRADUCCIÓN ADJUNTA

Control interno: 26169266114

<Número Sade/Especial a asignar>

0425

By virtue of the authority vested in the COLEGIO DE TRADUCTORES PÚBLICOS DE LA CIUDAD DE BUENOS AIRES (Buenos Aires Sworn Translators Association) by Argentine law No. 20 305 section 10(d), I hereby CERTIFY that the seal and signature affixed on the attached translation are consistent with the seal and signature on file in our records.
The Colegio de Traductores Públicos de la Ciudad de Buenos Aires only certifies that the signature and seal on the translation are genuine; it will not attest to the contents of the document.
THIS CERTIFICATION WILL BE VALID ONLY IF IT BEARS THE PERTINENT CHECK STAMP ON THE LAST PAGE OF THE ATTACHED TRANSLATION.

Vu par le COLEGIO DE TRADUCTORES PÚBLICOS DE LA CIUDAD DE BUENOS AIRES (Ordre des Traducteurs Officiels de la ville de Buenos Aires), en vertu des attributions qui lui ont été accordées par l'article 10, alinéa d) de la Loi n° 20.305, pour la seule légalisation matérielle de la signature et du sceau du Traductor Público (Traducteur Officiel) apposés sur la traduction du document ci-joint, qui sont conformes à ceux déposés aux archives de cette Institution.
LE TIMBRE APPOSÉ SUR LA DERNIÈRE PAGE DE LA TRADUCTION FERA PREUVE DE LA VALIDITÉ DE LA LÉGALISATION.

Il COLEGIO DE TRADUCTORES PÚBLICOS DE LA CIUDAD DE BUENOS AIRES (Ordine dei Traduttori abilitati della Città di Buenos Aires) CERTIFICA ai sensi dell'articolo 10, lettera d) della legge 20.305 che la firma e il timbro apposti sulla qui unita traduzione sono conformi alla firma e al timbro del Traduttore abilitato depositati presso questo Ente. Non certifica il contenuto della traduzione sulla quale la certificazione è apposta.
LA VALIDITÁ DELLA PRESENTE CERTIFICAZIONE È SUBORDINATA ALL'APPOSIZIONE DEL TIMBRO DI CONTROLLO DEL CTPCBA SULL'ULTIMA PAGINA DELL'ALLEGATA TRADUZIONE.

Por meio desta legalização, o COLEGIO DE TRADUCTORES PÚBLICOS DE LA CIUDAD DE BUENOS AIRES (Colégio dos Tradutores Públicos da Cidade de Buenos Aires), no uso de suas atribuições e em conformidade com o artigo 10, alínea "d", da Lei 20.305, somente reconhece a assinatura e o carimbo do Tradutor Público que subscreve a tradução em anexo por semelhança com a assinatura e o carimbo arquivados nos registros desta instituição.
A PRESENTE LEGALIZAÇÃO SÓ TERÁ VALIDADE COM A CORRESPONDENTE CHANCELA MECÂNICA APOSTA NA ÚLTIMA FOLHA DA TRADUÇÃO.

COLEGIO DE TRADUCTORES PÚBLICOS DE LA CIUDAD DE BUENOS AIRES (Kammer der vereidigten Übersetzer der Stadt Buenos Aires). Kraft der Befugnisse, die ihr nach Art. 10 Abs. d) von Gesetz 20.305 zustehen, bescheinigt die Kammer hiermit lediglich die Übereinstimmung der Unterschrift und des Siegelabdruckes auf der beigefügten Übersetzung mit der entsprechenden Unterschrift und dem Siegelabdruck des vereidigten Übersetzers (Traductor Público) in unseren Registern.
DIE VORLIEGENDE ÜBERSETZUNG IST OHNE DEN ENTSPRECHENDEN GEBÜHRENSTEMPEL AUF DEM LETZTEN BLATT DER BEIGEFÜGTEN ÜBERSETZUNG NICHT GÜLTIG.

TRADUCCIÓN PÚBLICA

Anexo 3	Item	Cant.	Precio Unitario (U$S)	Precio Total (U$S)
1	Bolster para trocha de 1676mm (unidad)	30	2950	$ 88.500,00
2	Marco lateral para trocha de 1676mm (unidad)	60	1463	$ 87.780,00
3	Bolster para trocha de 1435mm (unidad)	20	2399	$ 47.980,00
4	Marco Lateral para trocha de 1435mm (unidad)	40	1274	$ 50.960,00
5	Bolster para trocha de 1000mm (unidad)	30	1985	$ 59.550,00
6	Marco lateral para trocha de 1000mm (unidad)	60	1148	$ 68.880,00
7	Rueda 840mm (unidad)	700	1109	$ 776.300,00
8	Rodamiento 6x11 (unidad)	800	550	$ 440.000,00
9	Eje para trocha de 1676mm (unidad)	60	1828	$ 109.680,00
10	Eje para trocha de 1435mm (unidad)	40	1590	$ 63.600,00
11	Eje para trocha de 1000mm (unidad)	60	1366	$ 81.960,00
12	Caja reductora de transmisión para tolva (izquierda,unidad)	40	1957	$ 78.280,00
13	Caja reductora de transmisión para tolva (derecha,unidad)	40	1957	$ 78.280,00
14	Acople 13B(set)	100	5750	$ 575.000,00
15	Montaje de Puerta de Descarga para Vagón Tolva Minera para trocha de 1676mm (unidad)	50	1750	$ 87.500,00
16	Montaje de Puerta de Descarga para Tolva de Lastre para trocha de 1435mm (unidad)	20	1338	$ 26.760,00
17	Montaje de Puerta de Descarga para Tolva de Lastre para trocha de 1000mm (unidad)	20	1295	$ 25.900,00

18	Montaje de Puerta de Descarga para Tolva de Grano para trocha de 1676mm (unidad)	60	1422	$ 85.320,00
19	Montaje de Puerta de Descarga para Tolva de Grano para trocha 1435mm (unidad)	20	1271	$ 25.420,00
20	Montaje de Puerta de Descarga para Tolva de Grano para trocha 1000mm (unidad)	30	1206	$ 36.180,00
21	Montaje de Escotilla superior para Tolva de Grano (unidad)	50	2695	$ 134.750,00
22	Freno de mano (unidad)	40	391	$ 15.640,00
23	Anillo externo para trocha de 1676mm (unidad)	400	42	$ 16.800,00
24	Anillo Interno para trocha de 1676mm (unidad)	400	18	$ 7.200,00
25	Anillo Externo para trocha de 1435/1000mm (unidad)	400	38	$ 15.200,00
26	Anillo Interno para trocha de 1435/1000mm (unidad)	400	13	$ 5.200,00
27	Cuña (incluye resorte,unidad)	660	73	$ 48.180,00
28	Placa Central Superior (unidad)	100	202	$ 20.200,00
29	Travesaño de freno (trocha 1676mm, izquierda, unidad)	50	533	$ 26.650,00
30	Travesaño de freno (trocha 1676mm, derecha, unidad)	50	533	$ 26.650,00
31	Travesaño de freno (trocha 1435mm, izquierda, unidad)	50	468	$ 23.400,00
32	Travesaño de freno (trocha 1435mm, derecha, unidad)	50	468	$ 23.400,00
33	Travesaño de freno (trocha 1000mm, unidad)	50	390	$ 19.500,00
34	Adaptador (unidad)	400	121	$ 48.400,00
35	Patín lateral (unidad)	500	91	$ 45.500,00
36	Palanca de Freno para bogie de trocha de 1676mm (unidad)	100	98	$ 9.800,00

37	Palanca de Freno para bogie de trocha de 1435mm (unidad)	100	86	$ 8.600,00
38	Palanca de Freno para bogie de trocha de 1000mm (unidad)	100	77	$ 7.700,00
39	Barra de empuje para Bogie de Trocha de 1676mm (unidad)	50	150	$ 7.500,00

(En el borde inferior derecho aparecen tres firmas ilegibles) ----------

[Página Siguiente] ----------

40	Barra de empuje para Bogie de Trocha de 1435mm (unidad)	50	282	$ 14.100,00
41	Barra de empuje para Bogie de Trocha de 1000mm (unidad)	50	368	$ 18.400,00
42	Placa de Desgaste de la Placa Central (unidad)	90	31	$ 2.790,00
43	Adaptador de Placa de Desgaste (unidad)	360	10	$ 3.600,00
44	Placa de Desgaste de Columna Lateral (unidad)	360	18	$ 6.480,00
Total de repuestos para vagones				$ 3.449.470,00

(En el borde inferior derecho aparecen tres firmas ilegibles) ----------

---

Certifico que lo que antecede es traducción fiel al idioma español, del documento en idioma inglés, que he tenido ante mí, y al cual me remito. En Buenos Aires, el día 2 de octubre del año dos mil quince. ----------

COLEGIO DE TRADUCTORES PUBLICOS
DE LA CIUDAD DE BUENOS AIRES
Corresponde a la Legalización
Nº 66113/15
PRISCILA CRISTINA QUELMI

AGUSTINA SAUBIDET MARIN
TRADUCTORA PÚBLICA
INGLES
MAT. To. XIV Fo. 107 CAPITAL FEDERAL
INSCRIP. C.T.P.C.B.A. Nº 4993

ANEXO II

0425

[redacted]

ANEXO II

0425

COLEGIO DE TRADUCTORES PÚBLICOS DE LA CIUDAD DE BUENOS AIRES

República Argentina
Ley 20305

LEGALIZACIÓN

Por la presente, el COLEGIO DE TRADUCTORES PÚBLICOS DE LA CIUDAD DE BUENOS AIRES, en virtud de la facultad que le confiere el artículo 10 inc. d) de la ley 20305, certifica únicamente que la firma y el sello que aparecen en la traducción adjunta concuerdan con los correspondientes el/a la Traductor/a Público/a SAUBIDET MARÍN, AGUSTINA que obran en los registros de esta institución, en el folio 307 del Tomo 14 en el idioma INGLÉS

Legalización número: **66113**

Buenos Aires, 05/10/2015

GUSTAVO A. SIGALOFF
JEFE DE LEGALIZACIONES
COLEGIO DE TRADUCTORES PÚBLICOS
DE LA CIUDAD DE BUENOS AIRES

ESTA LEGALIZACIÓN NO SE CONSIDERARÁ VÁLIDA SIN EL CORRESPONDIENTE TIMBRADO DE CONTROL EN LA ÚLTIMA HOJA DE LA TRADUCCIÓN ADJUNTA

Control interno: 26169266113

<Número Sade/Especial a asignar>

0425

By virtue of the authority vested in the COLEGIO DE TRADUCTORES PÚBLICOS DE LA CIUDAD DE BUENOS AIRES (Buenos Aires Sworn Translators Association) by Argentine law No. 20 305 section 10(d), I hereby CERTIFY that the seal and signature affixed on the attached translation are consistent with the seal and signature on file in our records.
The Colegio de Traductores Públicos de la Ciudad de Buenos Aires only certifies that the signature and seal on the translation are genuine; it will not attest to the contents of the document.
THIS CERTIFICATION WILL BE VALID ONLY IF IT BEARS THE PERTINENT CHECK STAMP ON THE LAST PAGE OF THE ATTACHED TRANSLATION.

Vu par le COLEGIO DE TRADUCTORES PÚBLICOS DE LA CIUDAD DE BUENOS AIRES (Ordre des Traducteurs Officiels de la ville de Buenos Aires), en vertu des attributions qui lui ont été accordées par l'article 10, alinéa d) de la Loi n° 20.305, pour la seule légalisation matérielle de la signature et du sceau du Traductor Público (Traducteur Officiel) apposés sur la traduction du document ci-joint, qui sont conformes à ceux déposés aux archives de cette Institution.
LE TIMBRE APPOSÉ SUR LA DERNIÈRE PAGE DE LA TRADUCTION FERA PREUVE DE LA VALIDITÉ DE LA LÉGALISATION.

Il COLEGIO DE TRADUCTORES PÚBLICOS DE LA CIUDAD DE BUENOS AIRES (Ordine dei Traduttori abilitati della Città di Buenos Aires) CERTIFICA ai sensi dell'articolo 10, lettera d) della legge 20.305 che la firma e il timbro apposti sulla qui unita traduzione sono conformi alla firma e al timbro del Traduttore abilitato depositati presso questo Ente. Non certifica il contenuto della traduzione sulla quale la certificazione è apposta.
LA VALIDITÁ DELLA PRESENTE CERTIFICAZIONE È SUBORDINATA ALL'APPOSIZIONE DEL TIMBRO DI CONTROLLO DEL CTPCBA SULL'ULTIMA PAGINA DELL'ALLEGATA TRADUZIONE.

Por meio desta legalização, o COLEGIO DE TRADUCTORES PÚBLICOS DE LA CIUDAD DE BUENOS AIRES (Colégio dos Tradutores Públicos da Cidade de Buenos Aires), no uso de suas atribuições e em conformidade com o artigo 10, alínea "d", da Lei 20.305, somente reconhece a assinatura e o carimbo do Tradutor Público que subscreve a tradução em anexo por semelhança com a assinatura e o carimbo arquivados nos registros desta instituição.
A PRESENTE LEGALIZAÇÃO SÓ TERÁ VALIDADE COM A CORRESPONDENTE CHANCELA MECÂNICA APOSTA NA ÚLTIMA FOLHA DA TRADUÇÃO.

COLEGIO DE TRADUCTORES PÚBLICOS DE LA CIUDAD DE BUENOS AIRES (Kammer der vereidigten Übersetzer der Stadt Buenos Aires). Kraft der Befugnisse, die ihr nach Art. 10 Abs. d) von Gesetz 20.305 zustehen, bescheinigt die Kammer hiermit lediglich die Übereinstimmung der Unterschrift und des Siegelabdruckes auf der beigefügten Übersetzung mit der entsprechenden Unterschrift und dem Siegelabdruck des vereidigten Übersetzers (Traductor Público) in unseren Registern.
DIE VORLIEGENDE ÜBERSETZUNG IST OHNE DEN ENTSPRECHENDEN GEBÜHRENSTEMPEL AUF DEM LETZTEN BLATT DER BEIGEFÜGTEN ÜBERSETZUNG NICHT GÜLTIG.

0425 301

TRADUCCIÓN PÚBLICA----------

(A continuación aparece el Anexo 4.1. que consta de un plano. No es necesaria su traducción). ----------

(En la parte inferior de cada una de las 5 págs. que conforman el documento, aparecen 3 firmas ilegibles)

[Página Siguiente] ----------

Anexo 4.2. Especificaciones Técnicas del Tanque 25 K-T11. ----------

1. Características técnicas

1.1 Diseño y Pruebas

Tanque – de acuerdo a	IMDG, CFR 49, RID/ADR and ASME VIII, Div1 US DOT, RID/ADR y TC
	IMDG Espesor Equivalente (mm): 6 mm
Marco– de acuerdo a	Norma ISO 1496/3

1.2 Tipo ISO 1CC/22K2

1.3 Instrucción del UN tanque portátil T11

	SI	US
1.4 Capacidad Nominal (± 1% Tolerancia)	25 000 ℓ	6604 US gal

1.5 Dimensiones y Peso de Marco

Max. Peso Bruto	36000 kg	79366 lb
Tara (± 3% Tolerancia)	3650 kg	8047 lb
Longitud	6058 mm	20 ft
Ancho	2438 mm	8 ft
Alto	2591 mm	8 ft 6 in

1.6 Dimensiones de Tanque

Diámetro Interno	2370 mm	93.31 in
Espesor calculado del cilindro	4.18 mm	0.1646 in
Espesor admisible del cilindro	4.40 mm	0.1732 in
Tolerancia por corrosión	0.22 mm	
Espesor calculado de los cabezales		
Cabezales	4.40 mm	0.1732 in
Tolerancia por corrosión	0.20 mm	
Cabezales Toriesféricos		
Espesor de los cabezales después de formación	4.60 mm	0.1811 in

1.7 Presión y Temperatura

Temperatura Máxima Diseñada del tanque	-40-130 °C		
Presión Máxima Admisible de Trabajo	4.0 bar	58.0	psi
Presión de Prueba	6.0 bar	87.0	psi
Presión de Vacío	0.41 bar	5.95	psi
Calentado por Vapor			
Presión Máxima Admisible de Trabajo	4.0 bar	58.0	psi
Presión de Prueba	6.0 bar	87.0	psi

1.8 Material de Construcción

Estructura Q345D /SPA -H o eqv.

Esquina Norma ISO 1161 (Ensayado hasta –40°C)

Cilindro SANS 50028-7 (1.4402)

Contenido Máx. de carbón 0.03%

Laminado en frío 2B terminado

Cabezales SANS 50028-7 (1.4402)

Contenido Max. de carbón 0.03%

Laminados en caliente No.1 terminado

Proveedor de Material de Recipiente ALZ, TISCO, BAOSTEEL

Anillo Rigidizador de Vacío ASTM A240 Gr. 304, 2- fuera de la sección del canal

Canales de vapor ASTM A240 Gr. 304

[Página Siguiente] ----------

2. Montaje y Accesorios de Tanque

2.1 Pozo de Visita (Caja de Derrame Principal)

Proveedor FortVale/Perolo/GUARD

Dimensiones 500 mm ID

Material 316

Descripción Perfil bajo, fijación de 8 puntos

Junta PTFE/EPDM

2.2 Váivula de Seguridad de Alivio (Caja de Derrame Principal)

Proveedor FortVale/Perolo/GUARD

Cantidad	Una
Descripción	2.5" BSP Válvula Segura de Alivio
Especificaciones	Presión +4,4 Bar (+63,8 psi)
Soldadura en brida	Sí, fuera del eje central
Observaciones	Se reserva espacio para futuro montaje de otra válvula.

2.3 Válvula de Entrada de Aire (Caja de Derrame Posterior)

Proveedor	FortVale/Perolo/GUARD
Cantidad	Una
Descripción	Válvula Bola de Aire 1½" BSP con mango de perfil bajo y tapa de acero inoxidable.
Junta	Envuelta de PTFE
Soldadura en brida	Sí, fuera del eje central

2.4 Reserva de Espacio para Descarga Superior (Caja de Derrame Posterior)

Proveedor	FortVale/Perolo/GUARD
Cantidad	Una
Dimensiones	DN 80 (3")
Especificación	3" soldadura en la almohadilla del tanque (6xM12 en 168.3 PCD)
Junta	Envuelta de PTFE
Observaciones	Se reserva espacio para futuro montaje de una válvula mariposa sujetada 3" y tubo sifón. Existe una placa de guía de tubo de sifón montada en el fondo del tanque.
Soldadura en brida	Sí, en el eje central

2.5 Descarga inferior

Proveedor	FortVale/Perolo/GUARD
Dimensiones	DN 80 (3") diámetro de abertura
Especificación	Válvula interna – válvula de pie de 45 grados Válvula externa – válvula de mariposa sujetada DN80 con 3 " BSP conector roscado cerrado por una tapa de acero inoxidable

	con una cadena de sujeción
Junta	Envuelta de PTFE
Soldadura en brida	Sí
Observaciones	El control remoto CXIC se conecta al mango de la válvula interna y se reserva espacio para montar un fusible
Tapa	No

2.6 Termómetro

Cantidad	Uno
Descripción	Diámetro de 100 mm Escala doble -40°C a 160°C, -40°F a 320°F
Tipo	Tipo de contacto, termómetro dial
Posición	Extremo trasero (8 en punto)

2.7 Caja(s) de Derrame

Cantidad	Dos
Descripción	En el centro cerca del pozo de visita se reserva espacio para válvula segura de alivio. En la parte trasera cerca del espacio reservado para descarga superior hay entrada de aire.
Material	ASTM A240 304, espesor de 2 mm
Tubos de drenaje	Cada caja está equipada con 2 tubos de drenaje DN 25 PVC reforzados en espiral, montados a extremo opuesto de caja.
Tapa	No

[Página Siguiente]

2.8 Calentamiento por Vapor

Área de calentamiento	Por encima de 9.6m² eficientes
Nº de tuberías	8
Diámetro de entrada	3/4 de pulgada BSP rosca exterior
Diámetro de salida	3/4 de pulgada BSP rosca exterior

Válvula de drenaje	Sí, ¼ de pulgada BSP válvula de bola
Material de tapa de tubería	Acero inoxidable con cable

2.9 Tratamiento del Tanque

Decapado	
Interna	Sí
Pasivación	
Interna	Sí
Externa	Sólo cajas de derrame

2.10 Aislamiento y Revestimiento

Material	Lana de roca
Cilindro	Lana de roca 50mm
Cabezales	Variante de lana de roca 50mm
Observaciones	Papel de aluminio se pondrá entre aislamiento y cilindro del tanque.
Revestimiento	GRP (RAL 9010) de espesor de 1.8mm para el cilindro con 0.4mm de bandas de acero inoxidable pulido. Sello de silicona. GRP (RAL 9010) de espesor de 2.0mm para cabezales.

2.11 Pasarela

Disposición	Tipo "F" (1 x elementos longitudinales y 2 x elementos transversales)
Ancho / espesor	475 mm
Material	Aluminio Grado 5052H32 o equivalente
Observaciones	Se usan sujeciones de acero inoxidable con tuercas de seguridad de nylon.

2.12 Escalera

Se atornilla una escalera de un ancho de 300 mm (sección de 30 x 30 mm) con las tuercas soldadas en la parte derecha del marco trasero. Los peldaños de la escalera tienen una superficie antideslizante. La escalera está hecha de material SUS304.

2.13 Protección de Esquinas

4 protecciones de cada tanque están en las esquinas del marco superior. 4 protecciones de

0425

MARIN
:A
:DERAL
4993

apilamiento están en la parte frontal y trasera del marco.

2.14 Conexión de Puesta a Tierra

Una terminal de acero inoxidable 50 x 30 x 3 mm, con ajugero de 15 mm, en la parte trasera del tanque.

2.15 Cilindro de archivos

Un cilindro plástico de archives con 75 mm de diámetro y 320 mm de largo.

Color	Opaco
Agujero de drenaje	6mm de diámetro

2.16 Placas de Dato

Una placa de dato de acero inoxidable para cada tanque como se requiere el código.

2.17 Varilla de nivel No **Ménsula** No

2.18 Calibración

Placa de calibración	Sí, marcada en litros y galones EE.UU./cm, tachuela soldada dentro de caja de derrame.
Material	Acero inoxidable 304

2.19 Tratamiento del Marco

Preparación de la Superficie Granallado a SA 2.5 Acabado

[Página Siguiente] ----------

2.20 Pintado del Marco

Capa	Epoxi zinc imprimación rica	30 micras
Intermedio	Imprimación epoxi	40 micras
Capa Final	Hempatex	50 micras
Total DFT (Imprimación & Superior)	Min DFT	120 micras
Color de Capa Final	RAL 5013	

2.21 Etiquetas

Un conjunto de etiquetas obligatorias y el logotipo del cliente aprobado por cliente y aplicado por fabricante.

2.22 Pintado de Recipiente

Conductos de vapor, tuberías de entrada y salida y accesorios debajo del aislamiento son revestidos de la siguiente manera:

Hempel aluminio de silicona resistente al calor - mínimo 25 micras DFT

3. **Acabado de la superficie de recipiente y accesorios**

Recipiente	Laminado en frío 2B acabado.
Cabezales cóncavos	Pulidos a Ra 1,2 micras.
Soldadura circunferencial de envolvente	Penetración de la soldadura y la soldadura de superposición desteliada y pulida en la parte inferior de 400 mm. Terminada a 1,2 micras.

4. **Pruebas y Aprobaciones**

4.1 Estos contenedores tanque se fabrican de acuerdo a un diseño aprobado.

4.2 Cada unidad de producción es sujeta a pruebas y exámenes no destructivos como se requiere a la Division 1 ASME VIII, UIC y requisitos de calidad del propio fabricante. La autoridad independiente de inspección, BV/LR, inspecciona cada unidad.

4.3 Se aprobó carga de apilamiento de 86400kg en cada soporte de esquina para el contenedor tanque.

4.4 El contenedor tanque cumple con las especificaciones de las siguientes regulaciones y recomendaciones de Organizaciones Internacionales y se suministra con las Aprobaciones / Registraciones.

4.5 Cada contenedor se suministrará con las siguientes aprobaciones:

US-DOT IMDG

TIR CSC

RID / ADR Transporte Canadá

UIC

4.6 Radiografía (UW51 y UW52)

Envolvente	Mancha
Cabezales cóncavos	100%

5. **Documentación**

0425

Se suministrará la siguiente documentación:

5.1 Detalles y GA planos

5.2 Especificaciones técnicas

5.3 Certificado de Limpieza

5.4 Certificado de Inspección Inicial

5.5 BV/LR nota técnica / aprobaciones

Los archivos deben ser preparados como se especifica a continuación:

1 x archivo de papel

1 x CD ROM

Certifico que lo que antecede es traducción fiel al idioma español, del documento en idioma inglés, que he tenido ante mí, y al cual me remito. En Buenos Aires, el día 6 de noviembre del año dos mil quince. ----------

COLEGIO DE TRADUCTORES PUBLICOS
DE LA CIUDAD DE BUENOS AIRES
Corresponde a la Legalización
Nº 76252/15
GUSTAVO ADRIAN GIGALOFF

AGUSTINA SAUBIDET MARIN
TRADUCTORA PÚBLICA
INGLES
MAT. To. XIV Fo. 107 CAPITAL FEDERAL
INSCRIP. C.T.P.C.B.A. Nº 4993

T MARIN
BLICA
L FEDERAL
Nº 4993

ANEXO II

[redacted]

0425

ANEXO II

0425

COLEGIO DE TRADUCTORES PÚBLICOS DE LA CIUDAD DE BUENOS AIRES

República Argentina
Ley 20305

LEGALIZACIÓN

Por la presente, el COLEGIO DE TRADUCTORES PÚBLICOS DE LA CIUDAD DE BUENOS AIRES, en virtud de la facultad que le confiere el artículo 10 inc. d) de la ley 20305, certifica únicamente que la firma y el sello que aparecen en la traducción adjunta concuerdan con los correspondientes al/a la Traductor/a Público/a SAUBIDET MARÍN, AGUSTINA que obran en los registros de esta institución, en el folio 307 del Tomo 14 en el idioma INGLÉS

Legalización número: **76252**

Buenos Aires, 09/11/2015

MARCELO F. SIGALOFF
Gerente de Legalizaciones
Colegio de Traductores Públicos
de la Ciudad de Buenos Aires

ESTA LEGALIZACIÓN NO SE CONSIDERARÁ VÁLIDA SIN EL CORRESPONDIENTE TIMBRADO DE CONTROL EN LA ÚLTIMA HOJA DE LA TRADUCCIÓN ADJUNTA

Control interno: 26613176252

<Número Sade/Especial a asignar>

0425

By virtue of the authority vested in the COLEGIO DE TRADUCTORES PÚBLICOS DE LA CIUDAD DE BUENOS AIRES (Buenos Aires Sworn Translators Association) by Argentine law No. 20 305 section 10(d), I hereby CERTIFY that the seal and signature affixed on the attached translation are consistent with the seal and signature on file in our records.
The Colegio de Traductores Públicos de la Ciudad de Buenos Aires only certifies that the signature and seal on the translation are genuine; it will not attest to the contents of the document.
THIS CERTIFICATION WILL BE VALID ONLY IF IT BEARS THE PERTINENT CHECK STAMP ON THE LAST PAGE OF THE ATTACHED TRANSLATION.

Vu par le COLEGIO DE TRADUCTORES PÚBLICOS DE LA CIUDAD DE BUENOS AIRES (Ordre des Traducteurs Officiels de la ville de Buenos Aires), en vertu des attributions qui lui ont été accordées par l'article 10, alinéa d) de la Loi n° 20.305, pour la seule légalisation matérielle de la signature et du sceau du Traductor Público (Traducteur Officiel) apposés sur la traduction du document ci-joint, qui sont conformes à ceux déposés aux archives de cette Institution.
LE TIMBRE APPOSÉ SUR LA DERNIÈRE PAGE DE LA TRADUCTION FERA PREUVE DE LA VALIDITÉ DE LA LÉGALISATION.

Il COLEGIO DE TRADUCTORES PÚBLICOS DE LA CIUDAD DE BUENOS AIRES (Ordine dei Traduttori abilitati della Città di Buenos Aires) CERTIFICA ai sensi dell'articolo 10, lettera d) della legge 20.305 che la firma e il timbro apposti sulla qui unita traduzione sono conformi alla firma e al timbro del Traduttore abilitato depositati presso questo Ente. Non certifica il contenuto della traduzione sulla quale la certificazione è apposta.
LA VALIDITÁ DELLA PRESENTE CERTIFICAZIONE È SUBORDINATA ALL'APPOSIZIONE DEL TIMBRO DI CONTROLLO DEL CTPCBA SULL'ULTIMA PAGINA DELL'ALLEGATA TRADUZIONE.

Por meio desta legalização, o COLEGIO DE TRADUCTORES PÚBLICOS DE LA CIUDAD DE BUENOS AIRES (Colégio dos Tradutores Públicos da Cidade de Buenos Aires), no uso de suas atribuições e em conformidade com o artigo 10, alínea "d", da Lei 20.305, somente reconhece a assinatura e o carimbo do Tradutor Público que subscreve a tradução em anexo por semelhança com a assinatura e o carimbo arquivados nos registros desta instituição.
A PRESENTE LEGALIZAÇÃO SÓ TERÁ VALIDADE COM A CORRESPONDENTE CHANCELA MECÂNICA APOSTA NA ÚLTIMA FOLHA DA TRADUÇÃO.

COLEGIO DE TRADUCTORES PÚBLICOS DE LA CIUDAD DE BUENOS AIRES (Kammer der vereidigten Übersetzer der Stadt Buenos Aires). Kraft der Befugnisse, die ihr nach Art. 10 Abs. d) von Gesetz 20.305 zustehen, bescheinigt die Kammer hiermit lediglich die Übereinstimmung der Unterschrift und des Siegelabdruckes auf der beigefügten Übersetzung mit der entsprechenden Unterschrift und dem Siegelabdruck des vereidigten Übersetzers (Traductor Público) in unseren Registern.
DIE VORLIEGENDE ÜBERSETZUNG IST OHNE DEN ENTSPRECHENDEN GEBÜHRENSTEMPEL AUF DEM LETZTEN BLATT DER BEIGEFÜGTEN ÜBERSETZUNG NICHT GÜLTIG.

0425

FOLIO 12

MARIN
LICA
L FEDERAL
Nº 4993

TRADUCCIÓN PÚBLICA--

Anexo 4.3 --

Especificaciones Técnicas de la Máquina Pesada --------------------------------

(En cada una de las 22 páginas, sobre el margen inferior derecho, aparecen 3 firmas ilegibles)-----

I. Especificaciones Técnicas -

Especificaciones y Parámetros técnicos del Cargador de Ruedas 966H- - - - - - -

1. Especificaciones Técnicas -

1.1 Tren de potencia -

(1) Motor: motor Caterpillar C11 con tecnología ACERT, cumple con las normas EPA Tier III, EU Stage III -

- Modelo: C11 ACERT -
- Tipo: sistema de 6 cilindros en línea, refrigerado por agua, con turbocompresor de compuerta de descarga, pose enfriador de aire a aire (ATAAC) e inyección unitaria controlada electrónicamente.- - - - - - - - - - - - - - -
- Pot. neta: 194kW (260hp)@1,800rpm - - - - - - - - - - - - - - -
- Cilindrada: 11.1L - - - - - - - - - - - - - - - - - - -

(2)Trasmisión: -

- Tipo: Servo-transmisión planetaria controlada electrónicamente, control electrónico de presión del embrague - - - - - - - - -
-Trasmisión: 4 para avance y 4 para retroceso - - - - - - - - - - - - -
-Velocidad de desplazamiento máxima: 37.4km/h tanto en avance como en retroceso.- - - - - - - - -

(3) Convertidor de par: convertidor de par de estator de giro libre - - - - - - - - - - -

(4) Transmisión final: servo-transmisión planetaria automática - - - - - - - - - - -

(5) Ejes: semieje de suspensión, trabajos pesados, eje diferencial.- - - - - - - - - - -

1.2 Durabilidad -

(1) Varillaje de barra en Z

El varillaje de barra en Z comprobado con cucharones de la Serie de rendimiento ofrece una excelente penetración en la pila, grandes fuerzas de desprendimiento, buenos ángulos de giro hacia atrás y tiempos de excavación más rápidos. Los resultados son: mayor vida útil de los neumáticos, eficiencia del combustible superior y capacidades de producción excepcionales;

[Página Siguiente]

(2) Ejes

Los ejes están diseñados para manejar aplicaciones extremas que dan como resultado un rendimiento fiable y una vida útil prolongada. En eje delantero está montado firmemente en el bastidor para soportar las cargas de par de giro internas y aún mantener el soporte del cargador de ruedas. El eje trasero puede oscilar hasta ±13 grados, lo que ayuda a garantizar que las cuatro ruedas permanezcan en el suelo y proporciona estabilidad incluso en los terrenos más accidentados.

1.3 Sistema hidráulico

(1) Sistema hidráulico con detección de carga

El modelo 966H cuenta con un sistema hidráulico con detección de carga que se ajusta automáticamente a las condiciones de operación para proporcionar solo el flujo hidráulico que requiere el implemento para aumentar la eficiencia del combustible. Se ha implementado una nueva válvula hidráulica para proporcionar un mejor acceso al servicio y la distribución del peso de la máquina. Los operadores notarán una mayor facilidad de operación, más fuerza de tracción en la pila y un aumento en la fuerza de levantamiento.

(2) Flujo máximo: 320L/min

1.4 Sistema de dirección

(1) Sistema de dirección con detección de carga, dirección de bastidor articulado

(2) Sistema de dirección independiente

1.5 Estructura (bastidor y brazos)

(1) Torre de bastidor y soporte: estructura de caja

(2) Brazos de levantamiento: estructura de brazo doble

1.6 Cabina

(1) Cabina cerrada presurizada e insonorizada. Interior de la cabina: sistema de controles, monitoreo, instrumentos e interruptores.

(2) Asiento: totalmente ajustable, con suspensión neumática

1.7 Dispositivo de trabajo

(1) Varillaje de barra en Z

(2) Cucharones multipropósito: 4.2m³ , dientes y segmentos.

2. Parámetros

Carga útil nominal:..... 6.8t

Capacidad máxima del cucharón:.....4.2m³

Peso en orden de trabajo: 23,319kg

[Página Siguiente]

Potencia neta del motor:.....94kW

Par máximo del motor:.....1,299Nm

Velocidades de desplazamiento máximas.....Avance 37.4 km/h

Retroceso: 37.4 km/h

Tiempo de ciclo hidráulico:

- Levantamiento:.....6.5s
- Descarga:.....2.7s
- Bajada: 3.5s

Ejes:

- Delantero: .....Fijo
- Trasero: .....±13°

Distancia entre ejes: 3450mm

Altura máxima de descarga. Espacio libre de descarga en descargas de levantamiento máximo y de 45°..... 2837mm

Alcance de descarga de levantamiento máximo

Alcance delantero de descarga (levantamiento máximo y descarga a 45°):..... .....1525mm

Altura total con el cucharón completamente subido y descarga a 45° :.....5902mm

Espacio libre sobre el cargador del círculo con el cucharón en la posición de acarreo:14951mm

Profundidad de excavación:.....124mm

Fuerza máxima de desprendimiento:.....171kN

Espacio máximo:.....434mm

Giro pleno (a un lado):.....37°

Carga de equilibrio estático a giro pleno;.....13664kg

[Página Siguiente] ----------

Nivel de presión acústica (El nivel de presión acústica dinámica en los oídos del operador declarado en una máquina con configuración estándar, medido de acuerdo con los procedimientos especificados en "ISO 6396:2008,", es de 69dB(A) con la velocidad del ventilador de enfriamiento ajustada en un valor máximo.....69dB(A)

Neumáticos : 26.5R25

Dimensiones; (L× A × H).....9005×3,271×3,575mm

Configuración principal del Cargador de Ruedas 966H

SISTEMA ELÉCTRICO

- Alarma de retroceso
- Alternador de 115A con escobillas
- Batería sin mantenimiento(2) de 1,400 CCA
- Llave de encendido; interruptor de arranque/parada
- Sistema de iluminación, halógeno
- Motor de arranque eléctrico de servicio pesado
- Sistema de arranque y carga (24-voltios)

ENTORNO DEL OPERADOR

- Aire acondicionado
- Traba de la función del cucharón/herramienta
- Cabina presurizada e insonorizada ROPS/FOPS
- Lista para la instalación de radio, incluye antena, altavoces y convertidor(12'voltio,10A)
- Gancho para ropa
- Sistema monitor computarizado
- Instrumentos, medidores:
- Instrumentos, indicadores de advertencia
- Calentador y descongelador
- Bocina eléctrica (consola)
- Luz de techo (cabina)
- Espejo
- Asiento con suspensión neumática Confort Cat
- Cinturón de seguridad retráctil

0425316

ARIN
A
DERAL
1993

- Limpia y lavaparabrisas de brazo mojado delantero y trasero
- Ventana deslizante

TREN DE FUERZA

- Freno con disco mojado completamente hidráulico y hermético con Sistema Integral de Frenado (IBS, Integrated Braking System) e indicador de desgaste del freno
- Motor con tecnología ACERT
- Ventilador de radiador controlado electrónicamente e impulsado hidráulicamente con detección de temperatura por demanda
- Filtros, combustible, primario/secundario

[Página Siguiente]

- Filtros, aire del motor, primario/secundario/terciario
- Convertidor de par
- Transmisión planetaria, automática(4f/eR)

OTROS

- Posicionador automático del cucharón
- Guadabarros, acero (delanteros y traseros)
- Capó, no metálico, inclinación eléctrica
- Enfriador de aceite hidráulico
- Desconexión, levantamiento e inclinación, automática
- Varilla, barra en Z, tubo transversal fundido/palanca de inclinación
- Válvulas de muestreo de aceite
- Centro de servicio, eléctrico e hidráulico
- Dirección con detección de carga

Nota: Todos los materiales anteriores se incluyen e instalan en la máquina y ninguno se entrega por separado. (Es posible que equipo estándar sea diferente en algunas áreas. La entrega de fábrica será mejor.)

Especificaciones de la Excavadora Hidráulica de Ruedas M317D2

1. GENERALIDADES

1.1 La Excavadora Hidráulica de Ruedas M317D2 es uno de los productos estándar de Caterpillar. Este producto cuenta con la última y más novedosa tecnología, que ofrece

MARIN
CA
FEDERAL
4993

mayor eficiencia, más alta fiabilidad y durabilidad y una mejor protección del medioambiente.

2. ESPECIFICACIONES

2.1 Motor

El nivel de emisiones del equipo CAT C4.4 es equivalente a los estándares de emisión de EPA Tier III y EU IIIA. Ofrece mayor rendimiento y fiabilidad y además disminuye el consumo de combustible y el nivel de ruido. El motor tiene un nivel más bajo de ruidos para el operador y el observador, ciclos más prolongados para el reemplazo de filtros y una mayor eficiencia de combustible, además de proteger más al medio ambiente.

1. Potencia al volante ---------- 101kW
2. Clasificaciones ---------- 2,000 rpm
3. Cilindrada ---------- 4,4 L
4. Calibre × Carrera ---------- 105 mm × 127 mm
5. No hay pérdida de potencia a altitudes inferiores a los 3000 m.
6. Estándar EU Stage IIIA
7. Par máximo @ 1.400 rpm: ---------- 550N·m

2.2 Sistema hidráulico

1. Sistema de implemento principal
(1) Circuito de implemento (levantamiento pesado) ---------- 37500 kPa
(2) Flujo máximo
Circuito de implemento/desplazamiento ---------- 220 L/min
Circuito auxiliar – Presión alta ---------- 220 L/min

[Página Siguiente]

Circuito auxiliar – Presión media ---------- 40 L/min
Mecanismo de giro ---------- 80 L/min

2.3 Transmisión
Avance/Retroceso

1ª marcha 8 km/h

2ª marcha 34 km/h

Velocidad del movimiento ultra-lento

1ª marcha 3 km/h

2ª marcha 13 km/h

Tracción en la barra de tiro 97 kN

Rendimiento máximo en pendiente 69%

2.4 Mecanismo de giro
Velocidad de rotación 10,5 rpm
Par de giro 40 kN·m

3. DATOS

3.1 Peso en orden de trabajo 16,512 kg
3.2 Cucharón 0,8 m³

3.3 Potencia neta al volante 101 kW
3.4 Velocidad máxima de desplazamiento 34 km/h
3.5 Velocidad de giro10,5 rpm
3.6 Torque de giro 40kN·m
3.7 Tracción en la Barra de tiro 97kN
3.8 Radio de giro de la cola 2210mm
3.9 Dimensiones de transporte generales (L×A×H)8330×2550× 3150 mm
3.10 Gamas de trabajo
(1) Altura de excavación ----------9070 mm
(2) Altura de descarga ----------6110 mm
(3) Profundidad de excavación ----------5690 mm
(4) Profundidad de excavación vertical ----------3650 mm
(5) Limpieza recta a una profundidad de 2,5 m ----------5490 mm
(6) Alcance ----------9160 mm
(7) Alcance a nivel del suelo ----------8970 mm
(8) Fuerzas del cucharón (ISO 6015) ----------101 kN
(9) Fuerzas del brazo (ISO 6015) ----------74 kN

Neumático doble, 10.00-20 16 PRR

Pluma de una sola pieza de 5,05 m

Brazos estándar de 2,4 m

Cucharón para usos generales de 0,8 m³

EQUIPO ESTÁNDAR M317D2

Especificaciones eléctricas

[Página Siguiente]

- ☐ Alternador de 75ª
- ☐ Luces
- ● Luz de funcionamiento de la pluma
- ● Luz de interior de cabina
- ● Luces de desplazamiento por carretera (delanteras/traseras)
- ● Luces de trabajo montadas en la cabina (delanteras/traseras)
- ☐ Interruptor principal de apagado
- ☐ Baterías de servicio pesado que no requieren mantenimiento
- ☐ Bocina de señal/advertencia

Motor

- ☐ Control automático de velocidad del motor
- ☐ Auxiliar de arranque automático
- ☐ Motor Cat C4.4 con tecnología ACERT, que alcanza niveles de emisiones equivalentes a las normas de emisiones US EPA Tier III y EU Stage IIIA.
- ☐ Separador de combustible y agua con indicador de nivel

0425319

Sistema hidráulico

- ☐ Modalidad de levantamiento pesado
- ☐ Detección de carga más sistema hidráulico
- ☐ Modalidades de trabajo manual (economía, potencia)
- ☐ Bomba de giro por separado
- ☐ Circuito de recuperación del brazo

Estación del operador

- ☐ Posa-brazos ajustables
- ☐ Aire acondicionado, calentador y descongelador con climatización automática
- ☐ Cenicero con encendedor de cigarrillos (24 voltios)
- ☐ Portavasos/latas/botellas de bebidas
- ☐ Capacidad de FOGS empernada
- ☐ Sistema de limpiaparabrisas paralelo montado en la parte inferior
- ☐ Cámara montada en el contrapeso
- ☐ Gancho para ropa
- ☐ Alfombrilla lavable
- ☐ Asiento con suspensión completamente ajustable
- ☐ Panel de instrumentos y medidores
- ● Mensajes informativos y de advertencias
- ● Medidores para el nivel de combustible, el refrigerante del motor y la temperatura del aceite hidráulico
- ● Intervalo de cambio de filtros o fluidos
- ● Indicadores para faros delanteros, señal de giro, bajo nivel de combustible, ajuste del selector de motor
- ● Reloj con batería de respaldo que dura 10 días
- ☐ Parabrisas delantero laminado
- ☐ Consola izquierda reclinable con trabas para todos los controles
- ☐ Compartimiento para documentos detrás del asiento

[Página Siguiente]

- ☐ Porta-documentos en la consola derecha
- ☐ Soporte para teléfono celular
- ☐ Freno de estacionamiento
- ☐ Ventilación de filtrado positivo
- ☐ Suministro de corriente de 12 V, 7ª
- ☐ Ventana trasera con salida de emergencia
- ☐ Cinturón de seguridad retráctil
- ☐ Tragaluz
- ☐ Ventanas de la puerta deslizante
- ☐ Columna de dirección reclinable
- ☐ Área de almacenamiento adecuada para una lonchera
- ☐ Visera para parabrisas y claraboya
- ☐ Traba de la velocidad de desplazamiento
- ☐ Visor para la protección contra la lluvia

IARIN
A
DERAL
4993

Chasis

- ☐ Ejes de servicio pesado, fuerza de frenado ajustable
- ☐ Eje delantero oscilante con engrase remoto
- ☐ Neumáticos dobles 10.00-20 16 PR
- ☐ Dos cajas de herramientas en el chasis
- ☐ Eje motriz de dos piezas

Otros Equipos

- ☐ Freno de la rotación automática
- ☐ Contrapeso de 3.500 kg
- ☐ Espejos, bastidor y cabina
- ☐ Listo para el sistema Producto Link™

Todos los componentes del sistema arriba mencionados son diseñados y fabricados por Caterpillar Inc.

[Página Siguiente]

Especificaciones de Moto-niveladora 140K

1. Especificación
   a. Modelo: 140K
   b. Peso neto de vehículo: 14,292 kg
   c. Velocidad de desplazamiento máxima: 7.3 km/h en avance; 37.4 km/h en retroceso
   d. Levantamiento máximo encima de suelo: 480 mm
   e. Radio de giro fuera de neumático delantero: 7.5 m
2. Motor
   Modelo de motor: CAT®C7 ACERT ™
   Tipo: CAT C7 de 6 cilindros, refrigerado por agua, con motor diesel de turbocompresor
   Embolada × Calibre: 127 × 105mm
   Potencia neta: 1-2 Neta : 128 kW (171 hp)
   3 Neta : 135 kW (181 hp)
   4-8 Neta : 143 kW (191 hp)
   Cilindrada: 7.2L
3. Tren de Fuerza
   Tipo: Impulso directo, servo-transmisión
   Avance/Retroceso: 8 para avance/6 para retroceso

4. Vertedera

Tipo: Control hidráulico

Medida: 3.7×0.61×0.022 m

Filo de cuchilla: ancho:152mm/ espesor:16mm

Levantamiento máximo encima de suelo: 480mm

Alcance de diente de hoja: 40° en avance / 5° hacia atrás

Alcance máximo fuera de neumático

a la derecha: 1978 mm

a la izquierda: 1896mm

Ángulo máximo de la hoja: 90°

Profundidad máxima de corte: 735 mm

Espacio de garganta: 120 mm

5. Frenos

1) Servicio: aire comprimido, múltiple aceite-disco, área de superficie:23948 cm²

2) Aparcamiento: aire comprimido, múltiple aceite-disco

3) Auxiliar: circuito dual

6. Neumáticos: neumáticos,14.0-24 TR TL508 12PRSP

7. Servicio de relleno:

[Página Siguiente]

Capacidad de combustible: 305L

Caja de engranaje en serie: 64L/cada

Trasmisión/Diferencial/Transmisión Final: 60L

Sistema de enfriamiento: 40L

Aceite de motor: 18L

Excavadoras hidráulicas CAT320D2

1. Generalidades

El Cat 320D2 está diseñado y fabricado para una variedad de aplicaciones desde excavaciones, manejo del l material industrial hasta construcción y más. Es potente, fiable, duradera con gran productividad y

versatilidad, por lo que es una máquina ideal sin importar las tareas en los sitios de trabajo.

2. Especificaciones técnicas

2.1 Motor

El motor C7.1 de Cat está diseñado para cumplir con las normas de emisión de US EPA Tier 2, EU Stage 2 y China Tier 2. El motor es potente, resistente y duradero para cumplir con todas las necesidades de aplicación. La función de modalidad ECO ayuda a reducir el consumo de combustible hasta un 15 % para los clientes preocupados del consumo de combustible. Los Motores C7.1 incorporan componentes resistentes y comprobados, fabricados con precisión, con los que puede contar para una operación fiable y eficiente. Es un motor comprobado que ofrece una mayor fiabilidad, ya que es menos sensible a los combustibles de baja calidad y además proporciona un mejor consumo de combustible.

Potencia del motor ----------104 kW
Desplazamiento ----------7.01 L
Calibre × Carrera ----------105 mm × 135 mm

El Motor C7.1 probado en terreno puede funcionar eficazmente en altitudes de hasta 4.000 m (13.120').

2.2 Sistema hidráulico

1. Sistema principal
   (1) Presión máxima – equipo ----------35000 kPa
   (2) Sistema hidráulico principal:
      ① Número ----------2
      ② Flujo ----------2 × 202 L/min
      ③ Tipo ---------- Bomba de pistones axiales
2. **Sistema piloto**
   (1) Flujo máximo ----------32.4 L/min
   (2) Presión máxima ----------3900 kPa
3. **Cilindro hidráulico**
   (1) Cilindro de la pluma - Calibre × Carrera ----------120 × 1260 mm
   (2) Cilindro del brazo - Calibre × Carrera ----------140 ×1504 mm
   (3) Cilindro del cucharón - Calibre × Carrera ----------120 × 1104 mm
4. **Sistema hidráulico**

   La presión del sistema hidráulico generada por el sistema de dos bombas hidráulicas ofrece un rendimiento y una productividad excelentes de excavación.

[Página Siguiente]

5. **Sistema hidráulico de detección cruzada**

   El sistema hidráulico de detección cruzada utiliza las dos bombas hidráulicas al 100 % de la potencia del motor, en todas las condiciones de funcionamiento. Esto mejora la productividad gracias a que aumenta la velocidad del implemento y permite hacer giros más rápidos y más fuertes.
6. Amortiguadores de cilindro hidráulico

   Los amortiguadores están ubicados en el extremo de varilla de los cilindros de la pluma y en ambos extremos del cilindro del brazo para amortiguar impactos y, al mismo tiempo, reducir los niveles de ruido y prolongar la vida útil de los componentes.
7. Circuito de recuperación de la pluma y del brazo

   Los circuitos de recuperación del brazo y de la pluma ahorran energía durante las

operaciones en las que la pluma está hacia abajo y el brazo está insertado, lo que incrementa la eficiencia, reduce los tiempos de ciclo y la pérdida de presión para obtener mayor productividad, costos de operación más bajos y mayor eficiencia del combustible.

2.3 Diseño de carrocería y bastidores de rodillos inferiores

1. El bastidor principal de sección en caja y con forma de X ofrece una resistencia excelente contra la flexión torsional. Los bastidores de los rodillos inferiores con soldadura robótica son unidades pentagonales conformadas en prensas que ofrecen resistencia y vida útil excepcionales.
2. El sellado y lubricación de los rodillos de cadena, los rodillos portadores y las ruedas locas proporciona una excelente vida útil para mantener la máquina en el campo y trabajar más tiempo.
3. El tren de rodaje estándar se adapta bien para aplicaciones que requieren volver a ubicar con frecuencia la máquina en otro lugar, tienen espacio reducido de trabajo o terreno desigual y rocoso.

2.4 Estación del operador

1. La estación con diseño ergonómico del operador es espaciosa, silenciosa y cómoda, lo que garantiza alta productividad durante un día de trabajo prolongado. Todos los interruptores están ubicados en la consola derecha para tener acceso cómodo.
2. El monitor es una pantalla de cristal líquido (LCD) a todo color, que cuenta con la capacidad para mostrar la información en 42 idiomas.
3. El asiento con suspensión proporciona una variedad de ajustes para adaptarse a una amplia gama de operadores. Todos los asientos incluyen un respaldo reclinable, ajustes deslizantes superior e inferior del asiento y ajustes de altura e inclinación para satisfacer las necesidades del operador en cuanto a comodidad y productividad.
4. La ventilación de filtrado positivo con cabina presurizada es estándar. Se puede seleccionar aire fresco o aire recirculado mediante un interruptor que se encuentra ubicado en la consola izquierda.

2.5 Cadenas

Los eslabones de cadena 320D2 son ensamblados y sellados con grasa para disminuir el desgaste interno de los bujes, reducir el ruido viajes y prolongar la vida útil reduciendo los costos operativos.

2.6 Control automático de velocidad del motor

El control automático de velocidad del motor se activa durante condiciones sin carga o de carga liviana, lo que reduce la velocidad del motor para minimizar el consumo de combustible.

Pluma de alcance de servicio pesado de 5,7 m (18' 8") con luz lateral izquierda
- Brazo de HD R2.9B1 (9' 6")
- Zapatas con garra triple de 600 mm (24")

[Página Siguiente]

- Cucharones de servicio pesado de 1,0 m3

3. Especificaciones y parámetros

3.1 Peso en orden de trabajo (kg)	21,110 kg
3.2 Capacidad de pluma (m3)1.0 HD	

0425

MARIN
CA

FEDERAL
4993

3.3	Potencia neta al volante (kW) 98 kW
3.4	Velocidad máxima de desplazamiento (km/h)5.4 km/h
3.5	Velocidad de giro (rpm) 10.9 rpm
3.6	Par de giro (kN·m) 61.8 kN·m
3.7	Tracción máxima (kN)205 kN
3.8	Ancho de zapatas (mm)600 mm
3.9	Longitud de pluma (m) 5.7 m
3.10	Longitud de brazo (m)2.9 m
3.11	Alcance máximo a nivel del suelo (m)9.89 m
3.12	Profundidad máxima de excavación (m) 6.72 m
3.13	Altura máxima de carga (m)6.49 m
3.14	Profundidad máxima de excavación vertical (m)5.69 m
3.15	Altura máxima de corte (m)9.49 m
3.16	Calibre (m)2.2 m
3.17	Dimensiones de transporte generales (longitud × anchura × altura)9.46 × 2.8 × 3.03 m

Tractor topador D6R XL

Especificaciones:

Modelo:..... D6R XL

Peso en orden de trabajo:.....20,080 kg

Capacidad de hoja (Tipo de SU):..... 5.61 m^3

Motor

Modelo .....Cat® C9 ACERT™

Desplazamiento .....8.8 L

Potencia máxima a 1,800 rpm

Potencia bruta–ISO 14396 ....169 kW / 227 hp

Potencia neta –ISO 9249 ..... 158 kW / 212 hp

[Página Siguiente]

Velocidad de potencia a 2,000 rpm

Potencia bruta–ISO 14396 .....148 kW / 198 hp

Potencia neta–ISO 9249 .....131 kW / 175 hp

Transmisión

1.0 de avance .....3.8 km/h 2.3 mph

2.0 de avance	6.6 km/h 4.1 mph
3.0 de avance	11.5 km/h 7.1 mph
1.0 de retroceso	4.8 km/h 3 mph
2.0 de retroceso	8.4 km/h 5.2 mph
3.0de retroceso	14.6 km/h 9.1 mph
Tren de rodaje/Chasis	
Trocha de vía	1880 mm (74 in)
Espacio libre de suelo	383 mm (15.1 in)
Longitud de cadena sobre el suelo	2871 mm (104.9 in)
Zapata de cadena estándar	560 mm (22 in)
Área de contrato con el suelo	3.22 m2 (4,972 in2)
Presión sobre el suelo	0.623 kg/cm2 (8.90 psi)
Profundidad de excavación de bulldozer	459 mm
Altura libre sobre el suelo del bulldozer	1195 mm
Inclinación máxima del bulldozer	743 mm
Dimensiones	
(L×A×H) (Incluye la hoja SU de dozer)	5332mm×3260mm×3195 mm
(L×A×H) (Sin la hoja, con muñón)	3860mm×2640mm×3195 mm
Control hidráulico	
Capacidad de la bomba a	6900 kPa 1,001 psi
Flujo de la bomba	214 L/min 56.5 gal/min
Ajuste de la válvula alivio principal	42 000 kPa 6,092 psi
Presión en orden de trabajo máxima del bulldozer	42 000 kPa 6,092 psi
Presión en orden de trabajo máxima del giro	40 000 kPa 5,802 psi

Características

Motor - Tecnología ACERT™

Caterpillar es uno de los mayores fabricantes de motores del mundo. El motor Cat® está cuidadosamente diseñado para aumentar al máximo la durabilidad y fiabilidad. Los controles precisos optimizan la eficiencia de la alimentación y del combustible, a la vez que reducen las emisiones. La tecnología del motor ACERT™ proporcionan un avanzado control electrónico, un suministro preciso del combustible y un control del sistema de administración de aire, resultando un excelente rendimiento ...

[Página Siguiente]

... y bajos niveles de emisiones. El suministro de combustible de inyección múltiple controla el ciclo de combustión de manera sumamente precisa. Esto reduce la temperatura de la cámara de combustión para disminuir las emisiones, lo cual aúmenta el rendimiento del trabajo por unidad de combustible.

Sistema de dirección diferencial

La dirección diferencial le permite estar a la vanguardia de la productividad, al mantener la potencia en ambas cadenas mientras gira. Cuando una de las cadenas aumenta la velocidad, la otra disminuye la velocidad en la misma proporción. La maniobrabilidad, especialmente con cargas grandes en la hoja, es mucho mejor, al igual que los tiempos de ciclo en algunas aplicaciones. Es posible obtener una mayor capacidad de carga, más potencia y mejor control de velocidad en pendientes con condiciones de suelos blandos debido a que ambas cadenas reciben impulsión durante los giros. Una barra de timón sencilla controla todas las funciones direccionales y de velocidad para facilitar la operación.

Divisor de par

El divisor de par Cat exclusivo envía el 70% del par motor por un convertidor y el 30% por un eje motriz directo para obtener una mayor eficiencia de la línea de impulsión y una mayor multiplicación de par. El divisor de par del D6R proporciona gran fiabilidad y par dinámico bajo. Los componentes están diseñados para amortiguar la máxima potencia del motor y proporcionar una combinación óptima de eficiencia del operador y fiabilidad de la línea de impulsión.

Servo-transmisión planetaria

La transmisión incluye tres velocidades de avance y tres de retroceso, y cuenta con embragues gruesos enfriados por aceite de gran diámetro y alta capacidad, los cuales proporcionan una mayor capacidad de par y aumentar la vida de servicio. La servo-transmisión planetaria cuenta con un sistema de control mecánico comprobado y sólido. La transmisión modular y el diferencial se deslizan hacia la caja trasera para facilitar el servicio, incluso con el desgarrador instalado. Un enfriador del aceite-a- agua facilita la capacidad de enfriamiento máxima, y el flujo de aceite forzado lubrica y enfría los paquetes de embrague para aumentar al máximo la vida útil.

Tren de rodaje - rueda motriz elevada "alta impulsión"

Desde su innovadora introducción en 1978, más de 100.000 tractores topadores vendidos están equipados con el tren de rodaje de rueda motriz elevada "alta impulsión". Este es un diseño comprobado en terreno que ofrece un sobresaliente rendimiento de la máquina y mayor vida útil del componente. Gracias al diseño de rueda motriz elevada, el operador cuenta con excelentes líneas de visión hacia la hoja, los lados y la parte trasera de la máquina. Sin embargo, el centro de gravedad de la máquina sigue siendo bajo, lo que permite una excelente estabilidad, equilibrio y tracción.

Los componentes estándares de servicio pesado del tren de rodaje están diseñados para prolongar la vida útil en condiciones abrasivas y aplicaciones de alto impacto, como es el caso de las forestales, en pendientes laterales o trabajos en terreno rocoso o irregular. La cadena de servicio pesado está diseñada para aumentar la penetración. Los bordes delantero y de caída de cada cadena se superponen a la zapata adyacente para aumentar la durabilidad y la vida útil del componente.

[Página Siguiente]

Zapatas de cadena

El servicio extremo de zapatas de cadena por servicio pesado puede ayudar a optimizar la máquina según las aplicaciones más frecuentes.

Estructuras

La base de cada topadora Cat es un bastidor resistente fabricado para absorber cargas de alto impacto y fuerzas de torsión. Un sillín reforzado, soldado travesaño delantero y piezas fundidas de acero en la caja principal se suman a la fuerza en general.

Brazos de empuje en L

Los brazos de empuje en L permiten que la hoja quede más cerca de la máquina que en los diseños de tirante diagonal, lo que proporciona maniobrabilidad, equilibrio y penetración de la hoja excelentes. Este diseño proporciona estabilidad lateral y mejores posiciones del cilindro para la capacidad de desprendimiento constante que`es independiente de la altura de la hoja.

Sistema hidráulico con detección de carga

El sistema hidráulico con detección de carga comprobado en terreno, responde a los requisitos de operación mediante el ajuste automático y continuo de la potencia hidráulica para aumentar al máximo la eficiencia de la herramienta.

Cabina y controles

Características de confort, visibilidad excelente y controles de bajo esfuerzo ayudan a mejorar la eficiencia del operador para que puedan mantener concentrado y más productivo en el trabajo.

I. Listado de herramientas sin costo

El siguiente listado de herramientas se aplica a un solo conjunto de 966H, M317D2 y 140K:

Art.	Cant.	Nº de parte	Descripción
1	1	1P-0545	Galga de presión del neumático
2	1	1S-0259	Enchufe, 1/2 pulg, 12 Pt
3	1	4C-9592	Llave combinada, 3/8 pulg
4	1	4C-9594	Llave combinada, 1/2 pulg
5	1	4C-9595	Llave combinada, 9/16 pulg
6	1	4C-9596	Llave combinada, 5/8 pulg
7	1	4C-9597	Llave combinada, 11/16 pulg

[Página Siguiente]

8	1	4C-9598	Llave combinada, 3/4 pulg
9	1	4C-9605	Llave combinada, 5/16 pulg
10	1	5F-4764	Palanca, 406,4 mm(16.00 pulg) de largo
11	1	6V-7932	Destornillador estándar 3/8 pulg, 323.9 mm(12.75 pulg) de largo
12	1	6V-7934	Destornillador, PHILLIPS™ No.2, 247.7 mm(9.75 pulg) de largo
13	1	8F-9866	Pistola para engrasar
14	1	8H-8536	Enchufe, 1 5/16 pulg, 3/4 pulg, 12Pt.
15	1	8H-8537	Enchufe, 1 1/2 pulg, 3/4 pulg, 12Pt.
16	1	8H-8538	Enchufe, 1 11/16 pulg, 3/4 pulg, 12Pt.
17	1	8H-8541	Enchufe, 1 7/8 pulg, 3/4 pulg, 12Pt.
18	1	8H-8549	Enchufe, 9/16 pulg, 1/2 pulg, 12Pt.
19	1	8H-8551	Enchufe, 1 1/16 pulg, 1/2 pulg, 12Pt.
20	1	8H-8552	Enchufe, 3/4 pulg, 1/2 pulg, 12Pt.
21	1	8H-8553	Enchufe, 13/16 pulg, 1/2 pulg, 12Pt.
22	1	8H-8554	Enchufe, 7/8 pulg, 1/2 pulg, 12Pt.
23	1	8H-8555	Enchufe, 15/16 pulg, 1/2 pulg, 12Pt.
24	1	8H-8559	Extensión de enchufe, 1/2 pulg, 254.0 mm(10.00 pulg) de largo
25	1	8H-8581	Galga, filo 25, .0015 pulg a .025 pulg
26	1	9S-1730	Enchufe, 1 1/8 pulg, 1/2 pulg, 12Pt.
27	1	9S-1731	Enchufe, 1 1/4 pulg, 1/2 pulg, 12Pt.
28	1	185-3630	Llave de correa para filtro

[Página Siguiente]

29	1	212-8144	Válvula para enchufe, 1/2 pulg

T MARIN
BLICA

AL FEDERAL
Nº 4993

30	1	212-8145	Cable para destapar drenaje, 1/2 pulg hembra, 3/4 pulg macho
31	1	213-1985	Maneral corredizo, 1/2 pulg, 304.8mm(12.00in)de largo

El siguiente listado de herramientas se aplica a un solo conjunto de 320D2: — — — — — — — — — —

Art.	Cant.	Nº de parte	Descripción
1	1	65-255-22	S/DVR TANG THRU 8MMX10"
2	1	80308	Llave Allen cromada 4.0mm
3	1	80310	Llave Allen cromada 5.0mm
4	1	80312	Llave Allen cromada 6.0mm
5	1	80314	Llave Allen cromada 8.0mm
6	1	80316	Llave Allen cromada 10.0mm
7	1	80320	Llave Allen chapada en negro 14.0mm
8	1	47204	LLAVE INGLESA 10"
9	1	70502	PINZAS AJUSTALBES 8"
10	1	13301	ENCHUFE STD 1/2"PULG. 6PT 10MM
11	1	13302	ENCHUFE STD 1/2" PULG. 6PT 11MM
12	1	13304	ENCHUFE STD 1/2" PULG. 6PT 13MM
13	1	13307	ENCHUFE STD 1/2" PULG. 6PT 16MM
14	1	13309	ENCHUFE STD 1/2" PULG. 6PT 18MM
15	1	13313	ENCHUFE STD 1/2" PULG. 6PT 22MM
16	1	13315	ENCHUFE STD 1/2" PULG. 6PT 24MM
17	1	13317	ENCHUFE STD 1/2" PULG. 6PT 30MM

[Página Siguiente] ----------

18	1	13902	CARRACA 1/2" PULG.DESACOPLAMIENTO RÁPIDO

19	1	13909	MANGO ADAPTABLE 1/2" PULG. 250MM
20	1	13904	ALARGADORA 1/2" PULG. 5"
21	1	25104	ENCHUFE TORX BIT 1/2" PULG. T-30
22	1	25107	ENCHUFE TORX BIT 1/2" PULG. T-50
23	1	40211	LLAVE COMBINADA SL 16MM
24	1	40213	LLAVE COMBINADA SL 18MM
25	1	40214	LLAVE COMBINADA SL 19MM
26	1	40216	LLAVE COMBINADA SL 21MM
27	1	40217	LLAVE COMBINADA SL 22MM
28	1	Trabajo pesado	PISTOLA ELÉCTRICA (TRABAJO PESAOD)
29	1	518-0790	SET DE GALGA DE MEDICIÓN DE ESPESOR
30	1		PUNZÓN DE ENSANCHAR
31	1	TB135	CAJA DE HERRAMIENTAS CON BANDEJA
32	1		MARTILLO DE BOLA 32 onzas
33	1		LLAVE DE FILTRO

El siguiente listado de herramientas se aplica a un solo conjunto de D6R XL:

Art.	Cant.	Nº de parte	Descripción
1	1	1S-0259	Enchufe, 1/2 pulg, 12Pt.
2	1	4C-9592	Llave combinada, 3/8 pulg
3	1	4C-9594	Llave combinada, 1/2 pulg
4	1	4C-9595	Llave combinada, 9/16 pulg
5	1	4C-9596	Llave combinada, 5/8 pulg
6	1	4C-9598	Llave combinada, 3/4 pulg

[Página Siguiente] ----------

7	1	4C-9601	Llave combinada, 7/8 pulg
8	1	4C-9603	Llave combinada, 1 pulg
9	1	4C-9605	Llave combinada, 5/16 pulg
10	1	5F-4764	Palanca, 406,4 mm(16.00 pulg) de largo
11	1	6V-7934	Destornidllador, PHILLIPS™ No.2, 247.7 mm(9.75 pulg) de largo
12	1	6V-7935	Destornidllador Estándar 1/4 pulg, 196.0 mm(7.75 pulgs) de largo
13	1	8F-9866	Pistola para engrasar
14	1	8H-8549	Enchufe, 9/16 pulg, 1/2 pulg, 12Pt.
15	1	8H-8554	Enchufe, 7/8 pulg, 1/2 pulg, 12Pt.
16	1	8H-8555	Enchufe, 15/16 pulg, 1/2 pulg, 12Pt.
17	1	8H-8556	Enchufe, 1 pulg, 1/2 pulg, 12Pt.
18	1	8H-8559	Extensión de Enchufe, 1/2 pulg, 254.0 mm(10.00 pulgs) de largo
19	1	8H-8581	Galga, filo 25, 0015 pulg to .025 pulg
20	1	9S-1730	Enchufe, 1 1/8 pulg, 1/2 pulg, 12Pt.
21	1	9S-1732	Extensión de Enchufe, 1/2 pulg, 127.0 mm(5.00 pulgs) de largo
22	1	9U-6639	Trinquete, 1/2 pulg
23	1	185-3630	Llave de correa para filtro
24	1	211-0136	Saco de herramientas
25	1	212-8144	Válvula para enchufe, 1/2 pulg
26	1	212-8145	Cable para destapar drenajes, 1/2 pulg Hembra, 3/4 pulg Macho
27	1	213-1983	Alicates combinados, 167.0 mm(6.60 pulgs) de largo

I. Listado de repuestos de 2000 horas de trabajo

Los siguientes repuestos de 2000 horas de trabajo se aplican a un solo conjunto de 966H cargador de rueda:

Art.	Cant.	Nº de parte	Nombre de parte	Precio unitario (USD)	Subtotal
1	4	1R-1808	Filtro de aceite del motor	108	434
2	8	1R-0749	Filtro de combustible	76	606
3	4	326-1644	Filtro de separador de agua	112	448
4	4	245-3818	Filtro de aire (Primario)	166	664

MARIN
ICA
FEDERAL
Nº 4993

5	4	245-3819	Filtro de aire (Secundario)	102	407
6	4	126-1818	Filtro de refrigerador de aceite hidráulico -UHE	230	919

[Página Siguiente]

7	4	328-3655	Filtro de aceite de transmisión-AE	223	891
8	4	220-9090	RETENEDOR-G.E.T.(K-80, K-90, K-100)	60	240
9	4	220-9092	PUNTA-PROPÓSITO GENERAL(K-90)	161	645
			TOTAL		5,252

Los siguientes repuestos de 2000 horas de trabajo se aplican a un solo conjunto de M 317 D2 excavadora de rueda:

Art.	Cant.	Nº de parte	Nombre de parte	Precio unitario (USD)	Subtotal
1	4	7W2326	Filtro de aceite del motor	59	237
2	4	2998229	Filtro de combustible	93	373
3	4	4395037	Filtro de separador de agua	148	594
4	4	252-5001	Filtro de aire (Primario)	168	672
5	4	252-5002	Filtro de aire	124	495
6	2	3617480	Filtro de de aceite de pilotaje	202	405
7	4	8U-0723	Filtro de de aceite de retorno	253	1,013
8	5	1U3302	Punta larga	64	321
9	5	1073308	Pasador	3	16
10	5	1073308	Retenedor	3	16
			TOTAL		4,144

Los siguientes repuestos de 2000 horas de trabajo se aplican a un solo conjunto de 140K Moto-niveladora:

Art.	Cant.	Nº de parte	Nombre de parte	Precio unitario (USD)	Subtotal
1	8	1R-1807	Filtro de aceite del motor	67	540

MARIN
LICA
FEDERAL
Nº 4993

2	4	326-1644	Filtro de separador de agua(Primario)	112	447	
3	4	1R-0749	Filtro de combustible	76	303	
4	4	245-6376	Filtro de aire (Secundario)	94	377	

[Página Siguiente]

5	4	245-6375	Filtro de aire (Primario)	133	532
6	4	1R-0774	Filtro de de aceite hidráulico	115	459
7	4	328-3655	Filtro de aceite de transmisión	222	889
8	4	8S-9129	Filtro magnético de caja de cambios	70	278
			TOTAL		3,825

Los siguientes repuestos de 2000 horas de trabajo se aplican a un solo conjunto de 320D2 Excavadora Hidráulica:

Art.	Cant.	Nº de parte	Nombre de parte	Precio unitario (USD)	Subtotal
1	4	3223155	Filtro de aceite del motor	80	319
2	4	1R1804	Filtro de diesel	73	292
3	4	3820664	Filtro de separador de agua	131	525
4	2	1318821	Filtro de aire (Primario)	79	158
5	2	1318822	Filtro de aire (Secundario)	91	182
6	2	5I8670	Filtro de aceite de pilotaje	105	210
7	2	937521	Filtro de drenaje	89	177
8	2	1799806	Filtro de aceite de retorno	172	343
			TOTAL		2,206

Los siguientes repuestos de 2000 horas de trabajo se aplican a un solo conjunto de D6R XL Tractor Topador:

Art.	Cant.	Nº de parte	Nombre de parte	Precio unitario (USD)	Subtotal

T MARIN
BLICA
AL FEDERAL
. Nº 4993

1	4	1R-1808	Filtro de aceite del motor	144.3	577
2	4	1R-0762	Filtro de combustible	136.3	545
3	4	326-1644	Filtro de separador de agua	167.2	669
4	4	6I-2501	Filtro de aire (Primario)	157.3	629
5	4	6I-2502	Filtro de aire (Secundario)	117.6	471
6	2	328-3655	Filtro de aceite de transmisión -AE	416.5	833

[Página Siguiente] ----------21/22----------

7	8	1R-0777	Filtro de aceite hidráulico	179.7	1437
8	15	9W-1441	FUSIBLE 15A	4.0	59
9	7	9W-1442	FUSIBLE 10A	4.0	28
10	2	9W-1446	FUSIBLE 20A	4.0	8
11	2	239-8107	FUSIBLE 175A	34.3	69
12	2	351-9918	LÁMPARA (24 voltios, 70-WATT) (PROYECTOR)	50.1	100
13	15	3B-8489	Engrasador	5.0	75
				Total	5500

----------22/22----------

Certifico que lo que antecede es traducción fiel al idioma español, del documento en idioma inglés, que he tenido ante mí, y al cual me remito. En Buenos Aires, el día 2 de octubre del año dos mil quince. ----------

COLEGIO DE TRADUCTORES PUBLICOS
DE LA CIUDAD DE BUENOS AIRES
Corresponde a la Legalización
Nº 666504/15

AGUSTINA SAUBIDET MARIN
TRADUCTORA PÚBLICA
INGLES
MAT. To. XIV Fo. 107 CAPITAL FEDERAL
INSCRIP. C.T.P.C.B.A. Nº 4993

ANEXO II

0425

[redacted]

<Número Sade/Especial a asignar>

<Número página a asignar>

ANEXO II

0425

MINISTERIO DEL INTERIOR Y TRANSPORTE
SUBSECRETARÍA DE ASUNTOS JURÍDICOS
DOCUMENTO OFICIAL
336

COLEGIO DE TRADUCTORES PÚBLICOS DE LA CIUDAD DE BUENOS AIRES

República Argentina
Ley 20305

LEY 20305

LEGALIZACIÓN

Por la presente, el COLEGIO DE TRADUCTORES PÚBLICOS DE LA CIUDAD DE BUENOS AIRES, en virtud de la facultad que le confiere el artículo 10 inc. d) de la ley 20305, certifica únicamente que la firma y el sello que aparecen en la traducción adjunta concuerdan con los correspondientes al/a la Traductor/a Público/a SAUBIDET MARÍN, AGUSTINA que obran en los registros de esta institución, en el folio 307 del Tomo 14 en el idioma INGLÉS

Legalización número: **66504**

Buenos Aires, 06/10/2015

GUSTAVO A. SIGALOFF
JEFE DE LEGALIZACIONES
COLEGIO DE TRADUCTORES PÚBLICOS
DE LA CIUDAD DE BUENOS AIRES

ESTA LEGALIZACIÓN NO SE CONSIDERARÁ VÁLIDA SIN EL CORRESPONDIENTE TIMBRADO DE CONTROL EN LA ÚLTIMA HOJA DE LA TRADUCCIÓN ADJUNTA

Control interno: 26185266504

<Número Sade/Especial a asignar>

0425

By virtue of the authority vested in the COLEGIO DE TRADUCTORES PÚBLICOS DE LA CIUDAD DE BUENOS AIRES (Buenos Aires Sworn Translators Association) by Argentine law No. 20 305 section 10(d), I hereby CERTIFY that the seal and signature affixed on the attached translation are consistent with the seal and signature on file in our records.
The Colegio de Traductores Públicos de la Ciudad de Buenos Aires only certifies that the signature and seal on the translation are genuine; it will not attest to the contents of the document.
THIS CERTIFICATION WILL BE VALID ONLY IF IT BEARS THE PERTINENT CHECK STAMP ON THE LAST PAGE OF THE ATTACHED TRANSLATION.

Vu par le COLEGIO DE TRADUCTORES PÚBLICOS DE LA CIUDAD DE BUENOS AIRES (Ordre des Traducteurs Officiels de la ville de Buenos Aires), en vertu des attributions qui lui ont été accordées par l'article 10, alinéa d) de la Loi n° 20.305, pour la seule légalisation matérielle de la signature et du sceau du Traductor Público (Traducteur Officiel) apposés sur la traduction du document ci-joint, qui sont conformes à ceux déposés aux archives de cette Institution.
LE TIMBRE APPOSÉ SUR LA DERNIÈRE PAGE DE LA TRADUCTION FERA PREUVE DE LA VALIDITÉ DE LA LÉGALISATION.

Il COLEGIO DE TRADUCTORES PÚBLICOS DE LA CIUDAD DE BUENOS AIRES (Ordine dei Traduttori abilitati della Città di Buenos Aires) CERTIFICA ai sensi dell'articolo 10, lettera d) della legge 20.305 che la firma e il timbro apposti sulla qui unita traduzione sono conformi alla firma e al timbro del Traduttore abilitato depositati presso questo Ente. Non certifica il contenuto della traduzione sulla quale la certificazione è apposta.
LA VALIDITÁ DELLA PRESENTE CERTIFICAZIONE È SUBORDINATA ALL'APPOSIZIONE DEL TIMBRO DI CONTROLLO DEL CTPCBA SULL'ULTIMA PAGINA DELL'ALLEGATA TRADUZIONE.

Por meio desta legalização, o COLEGIO DE TRADUCTORES PÚBLICOS DE LA CIUDAD DE BUENOS AIRES (Colégio dos Tradutores Públicos da Cidade de Buenos Aires), no uso de suas atribuições e em conformidade com o artigo 10, alínea "d", da Lei 20.305, somente reconhece a assinatura e o carimbo do Tradutor Público que subscreve a tradução em anexo por semelhança com a assinatura e o carimbo arquivados nos registros desta instituição.
A PRESENTE LEGALIZAÇÃO SÓ TERÁ VALIDADE COM A CORRESPONDENTE CHANCELA MECÂNICA APOSTA NA ÚLTIMA FOLHA DA TRADUÇÃO.

COLEGIO DE TRADUCTORES PÚBLICOS DE LA CIUDAD DE BUENOS AIRES (Kammer der vereidigten Übersetzer der Stadt Buenos Aires). Kraft der Befugnisse, die ihr nach Art. 10 Abs. d) von Gesetz 20.305 zustehen, bescheinigt die Kammer hiermit lediglich die Übereinstimmung der Unterschrift und des Siegelabdruckes auf der beigefügten Übersetzung mit der entsprechenden Unterschrift und dem Siegelabdruck des vereidigten Übersetzers (Traductor Público) in unseren Registern.
DIE VORLIEGENDE ÜBERSETZUNG IST OHNE DEN ENTSPRECHENDEN GEBÜHRENSTEMPEL AUF DEM LETZTEN BLATT DER BEIGEFÜGTEN ÜBERSETZUNG NICHT GÜLTIG.

TRADUCCIÓN PÚBLICA

ANEXO 5. DESGLOSE TOTAL DE PRECIOS DEL CONTRATO

DESGLOSE DE PRECIOS POR PROVISIONES			
Articulo	Precio por unidad (U$S)	Cant.	Total (U$S)
COMPONENTES DE LAS VÍAS			
Rieles de acero (t)	1.120	164.699	184.462.880
Durmientes de trocha ancha (unidad)	104	744.079	77.384.216
Durmientes de trocha métrica (unidad)	78	1.526.140	119.038.920
Sujetadores (un set por cada durmiente)	20	2.326.940	46.538.800
Componentes totales de las Vias			**427.424.816**
MATERIAL RODANTE			
Locomotoras			**230.886.392**
Locomotoras 1676 (set)	2.019.600	67	135.313.200
Locomotoras 1435(set)	2.019.600	20	40.392.000
Locomotoras 1000(set)	2.019.600	20	40.392.000
Repuestos para Locomotoras	14.789.192	1	14.789.192
Vagones			**422.843.720**
Vagón plano 1676 (set) (espina de pescado)	105.000	200	21.000.000
Vagón plano 1435 (set) (espina de pescado)	105.000	100	10.500.000
Vagón plano 1000 (set) (espina de pescado)	105.000	100	10.500.000
Vagón plano 1676 (set) (propósito general)	105.000	130	13.650.000
Vagón plano 1435 (set) (propósito general)	105.000	70	7.350.000
Vagón plano 1000 (set) (propósito general)	105.000	100	10.500.000
Vagón abierto de carga de carbón 1676 (set)	109.719	200	21.943.800
Vagón Borde Alto (set) 1435	109.719	100	10.971.900
Vagón Borde Alto (set) 1000	109.719	100	10.971.900
Vagón tolva granero1676 (set)	132.193	650	85.925.450
vagón tolva granero 1435 (set)	132.193	150	19.828.950
Vagón tolva granero 1000 (set)	132.193	500	66.096.500
Vagón tolva minera 1676 (set)	118.741	750	89.055.750
Vagón tolva de balasto 1435 (set)	118.000	150	17.700.000
Vagón tolva de balasto 1000 (set)	117.000	200	23.400.000
Repuestos para vagones	3449470	1	3.449.470
Total material rodante			653.730.112
PARTES DE VAGONES			
Ruedas (unidad)	890	16.000	14.240.000
Rodamientos 5 x 9 (unidad)	445	4.000	1.780.000
Rodamientos 51/2 x 10 (unidad)	485	12.000	5.820.000

0425 339

Eje de trocha de 1000mm (unidad)	1.000	2.000	2.000.000
Eje de trocha de 1435mm (unidad)	1.075	1.200	1.290.000
Eje de trocha de 1676mm (unidad)	1.150	4.800	5.520.000
Sistemas de frenado neumático (set)	9.900	2.000	19.800.000
Acoples (set)	5.750	2.000	11.500.000
Total de partes de vagón			**61.950.000**
MAQUINARIA PESADA			
Cargador de Ruedas CAT 966H (set)	432.740	18	7.789.320
Repuestos para Cargador de Ruedas CAT 966H (Set)	5.252	18	94.536
Máquina excavadora hidráulica de ruedas CAT M317D2 (set)	298.100	37	11.029.700
Repuestos Excavadora hidráulica de Ruedas CAT M317D2(set)	4.144	37	153.328
CAT 140K Motoniveladora (set)	433.000	6	2.598.000
Repuestos para Motoniveladora CAT 140K (set)	3.825	6	22.950
Excavadora Hidráulica CAT 320D2 (set)	287.000	7	2.009.000
Repuestos para Excavadora Hidráulica CAT 320D2 (set)	2.206	7	15.442
Topadora CAT D6R Bulldozer(set)	420.000	18	7.560.000
Repuestos para Topadora CAT D6R Bulldozer(set)	5.500	18	99.000
Total Maquinaria Pesada			**31.371.276**
MAQUINARIA DE MANTENIMIENTO A GRAN ESCALA			

1/2

(En el borde inferior, a la derecha y a la izquierda, aparecen tres firmas ilegibles) AGUSTINA TRADUC

[Página Siguiente] MAT. To. XIV F INSCRIP. (

Vehiculo de Detección de Fallas de Rieles y Medición de Vias (1676mm)(set)	8.141.000	1	8.141.000
Esmeriladora de rieles (1676mm)(set)	9.188.000	1	9.188.000
Estabilizador de Via Dinámico (1676mm)(set)	2.739.000	1	2.739.000
Bateadora (1676mm)(set)	3.061.000	1	3.061.000
Regulador de Balasto (1676mm)(set)	1.048.000	1	1.048.000
Camión de Via (1676mm)(set)	1.284.500	4	5.138.000
Camión de via (1000mm)(set)	1.282.000	1	1.282.000
Repuestos para Operación durante dos años	1.835.820	1	1.835.820
Total de Maquinaria de Mantenimiento a Gran Escala			**32.432.820**
CONTENEDOR			
tanque 20' (set)	34.000	200	6.800.000
Total Contenedor			6.800.000
HERRAMIENTAS PARA TALLERES			

Torno de Rueda bajo piso (set)	1.960.000	3	5.880.000
Maquina eléctrica de maniobra (set)	500.000	3	1.500.000
Torno de Torneado Vertical(set)	510.000	3	1.530.000
Torno de Pares Montados (set)	800.000	3	2.400.000
Prensa de Montaje de Ruedas (set)	460.000	2	920.000
Equipo ultrasonido de prueba de eje	57.000	4	228.000
Instalaciones de prueba de válvulas de freno	133.000	3	399.000
Detector de eje caliente	400.000	10	4.000.000
Medidor de perfil de rueda automático	600.000	3	1.800.000
Equipo prueba de freno vagón aislado	75.000	9	675.000
Prensa de instalación y extracción de rodamiento*	130.749	4	522.996
Gatos grúa vagón 25 ton *4	171.000	10	1.710.000
Herramientas totales para talleres			21.564.996
Precio de provisión Total [A]			1.235.274.020

DESGLOSE DE PRECIO EJECUCIÓN OBRAS

Artículo	Precio unitario (U$S)	Cant.	Total (U$S)
Rehabilitacion obras públicas	730.000	1.511	1.103.030.000
Mejoras obras civiles (no menos que km)	300.000	321	96.265.165
Honorarios de CMEC por monitoreo y pago de servicios			35.978.855
Precio total de ejecución [B]			1.235.274.020

PRECIO TOTAL DEL CONTRATO [A]+[B]	2.470.548.040

Aclaraciones: ----------

1. El precio de provisión p/u se establece en base a la Espec. Téc. del Texto Ordenado del Contr. y sus Enmiendas
2. El precio de ejecución total se asignará a la Construcción mientras que el precio unitario sirve como referencia y será determinado, en última instancia por los constructores ----------

---------- 2/2 ----------

(En el borde inferior, a la derecha y a la izquierda, aparecen tres firmas ilegibles) ----------

---

Certifico que lo que antecede es traducción fiel al idioma español, del documento en idioma inglés, que he tenido ante mí, y al cual me remito. En Buenos Aires, el día 2 de octubre del año dos mil quince. ------

COLEGIO DE TRADUCTORES PUBLICOS DE LA CIUDAD DE BUENOS AIRES
Corresponde a la Legalización
Nº 66107/15
PRISCILA CRISTINA GOSLEFI

MARIN
TRADUCTORA PÚBLICA
INGLES
MAT. To. XIV Fo. 107 CAPITAL FEDERAL
INSCRIP. C.T.P.C.B.A. Nº 4993

ANEXO II

0425

0425 342

COLEGIO DE TRADUCTORES PÚBLICOS DE LA CIUDAD DE BUENOS AIRES

República Argentina
Ley 20305

LEGALIZACIÓN

Por la presente, el COLEGIO DE TRADUCTORES PÚBLICOS DE LA CIUDAD DE BUENOS AIRES, en virtud de la facultad que le confiere el artículo 10 inc. d) de la ley 20305, certifica únicamente que la firma y el sello que aparecen en la traducción adjunta concuerdan con los correspondientes al/a la Traductor/a Público/a SAUBIDET MARÍN, AGUSTINA que obran en los registros de esta institución, en el folio 307 del Tomo 14 en el idioma INGLÉS

Legalización número: **66107**

Buenos Aires, 05/10/2015

GUSTAVO A. SIGALOFF
JEFE DE LEGALIZACIONES
COLEGIO DE TRADUCTORES PÚBLICOS
DE LA CIUDAD DE BUENOS AIRES

ESTA LEGALIZACIÓN NO SE CONSIDERARÁ VÁLIDA SIN EL CORRESPONDIENTE TIMBRADO DE CONTROL EN LA ÚLTIMA HOJA DE LA TRADUCCIÓN ADJUNTA

Control interno: 26169266107

<Número Sade/Especial a asignar>

By virtue of the authority vested in the COLEGIO DE TRADUCTORES PÚBLICOS DE LA CIUDAD DE BUENOS AIRES (Buenos Aires Sworn Translators Association) by Argentine law No. 20 305 section 10(d), I hereby CERTIFY that the seal and signature affixed on the attached translation are consistent with the seal and signature on file in our records.
The Colegio de Traductores Públicos de la Ciudad de Buenos Aires only certifies that the signature and seal on the translation are genuine; it will not attest to the contents of the document.
THIS CERTIFICATION WILL BE VALID ONLY IF IT BEARS THE PERTINENT CHECK STAMP ON THE LAST PAGE OF THE ATTACHED TRANSLATION.

Vu par le COLEGIO DE TRADUCTORES PÚBLICOS DE LA CIUDAD DE BUENOS AIRES (Ordre des Traducteurs Officiels de la ville de Buenos Aires), en vertu des attributions qui lui ont été accordées par l'article 10, alinéa d) de la Loi n° 20.305, pour la seule légalisation matérielle de la signature et du sceau du Traductor Público (Traducteur Officiel) apposés sur la traduction du document ci-joint, qui sont conformes à ceux déposés aux archives de cette Institution.
LE TIMBRE APPOSÉ SUR LA DERNIÈRE PAGE DE LA TRADUCTION FERA PREUVE DE LA VALIDITÉ DE LA LÉGALISATION.

Il COLEGIO DE TRADUCTORES PÚBLICOS DE LA CIUDAD DE BUENOS AIRES (Ordine dei Traduttori abilitati della Città di Buenos Aires) CERTIFICA ai sensi dell'articolo 10, lettera d) della legge 20.305 che la firma e il timbro apposti sulla qui unita traduzione sono conformi alla firma e al timbro del Traduttore abilitato depositati presso questo Ente. Non certifica il contenuto della traduzione sulla quale la certificazione è apposta.
LA VALIDITÁ DELLA PRESENTE CERTIFICAZIONE È SUBORDINATA ALL'APPOSIZIONE DEL TIMBRO DI CONTROLLO DEL CTPCBA SULL'ULTIMA PAGINA DELL'ALLEGATA TRADUZIONE.

Por meio desta legalização, o COLEGIO DE TRADUCTORES PÚBLICOS DE LA CIUDAD DE BUENOS AIRES (Colégio dos Tradutores Públicos da Cidade de Buenos Aires), no uso de suas atribuições e em conformidade com o artigo 10, alínea "d", da Lei 20.305, somente reconhece a assinatura e o carimbo do Tradutor Público que subscreve a tradução em anexo por semelhança com a assinatura e o carimbo arquivados nos registros desta instituição.
A PRESENTE LEGALIZAÇÃO SÓ TERÁ VALIDADE COM A CORRESPONDENTE CHANCELA MECÂNICA APOSTA NA ÚLTIMA FOLHA DA TRADUÇÃO.

COLEGIO DE TRADUCTORES PÚBLICOS DE LA CIUDAD DE BUENOS AIRES (Kammer der vereidigten Übersetzer der Stadt Buenos Aires). Kraft der Befugnisse, die ihr nach Art. 10 Abs. d) von Gesetz 20.305 zustehen, bescheinigt die Kammer hiermit lediglich die Übereinstimmung der Unterschrift und des Siegelabdruckes auf der beigefügten Übersetzung mit der entsprechenden Unterschrift und dem Siegelabdruck des vereidigten Übersetzers (Traductor Público) in unseren Registern.
DIE VORLIEGENDE ÜBERSETZUNG IST OHNE DEN ENTSPRECHENDEN GEBÜHRENSTEMPEL AUF DEM LETZTEN BLATT DER BEIGEFÜGTEN ÜBERSETZUNG NICHT GÜLTIG.

TRADUCCIÓN PÚBLICA ----------

Anexo 6 ----------

---------- **Programa de Aceptación y Puesta en Marcha**----------

---------- **Para Tornos y Prensa** ----------

El siguiente plan es un Programa Preliminar y de Puesta en Marcha y Aceptación para tornos y la prensa, mientras que el programa final será confirmado durante la reunión técnica.---------

1. CMEC enviará técnicos a las instalaciones del Contratante a fin de supervisar y guiar la descarga, instalación, puesta en marcha y aceptación de los tornos. ----------

2. Servicios de pre-aceptación para tornos. ----------

(1) pasados cuatro meses de la entrada en vigencia de la Enmienda II, CMEC suministrará los siguientes documentos necesarios para que el Contratante prepare el diseño y construcción de las instalaciones en donde serán instaladas las maquinarias.----------

- Planos de instalación. ----------
- Manual de instalación. ----------

- Requerimientos eléctricos. ----------

- Requerimientos adicionales de maquinarias como ser grúas, transportadoras de viruta, guinches y otros. ----------

- Características especiales de los Tornos. ----------

----- ACLARACIÓN: El Contratante llevará a cabo el diseño y la construcción de las obras civiles conforme a los documentos técnicos antes mencionados, por CMEC, y los tornos y fabricantes de prensas. Una vez que los dibujos de fundación y los diseños de construcción hayan sido completados, el Contratante suministrará los dibujos antes mencionados a CMEC para la revisión por parte de CMEC. Tras la confirmación de los dibujos por parte de CMEC, el Contratante comenzará la construcción de las obras civiles. Una vez que estas se encuentren terminadas, CMEC entregará los Tornos y la Prensa. ----------

(2) Cuando los Tornos y la Prensa sean entregados en las instalaciones del Contratante, el Contratante, tan pronto sea posible pero en un plazo que no superará dos semanas desde dicha fecha, comenzará la puesta en marcha de las maquinarias bajo la supervisión e instrucción del

personal técnico de CMEC. Ambas partes cooperarán ampliamente, juntas. La Puesta en marcha tendrá lugar tras la debida instalación de los Tornos y la Prensa. ----------

(3) Durante la puesta en marcha, el Contratante realizará pruebas bajo la supervisión e instrucción de técnicos de CMEC. El detalle de los puntos a someter a prueba será determinado más adelante. Cuando finalicen las pruebas de puesta en marcha, se emitirá un PAC conforme a las estipulaciones del Contrato. ----------

---------- 1/2 ----------

(Sobre el margen inferior derecho aparecen tres firmas ilegibles). ----------

[Página Siguiente] ----------

---

(4) Durante el período de garantía, CMEC es responsable del envío de técnicos a fin de brindar servicios de post-venta en Argentina. El plan de servicio se ajustará de acuerdo a la situación de uso y trabajo de diferentes máquinas. ----------

(5) Los ingenieros de CMEC serán responsables de la capacitación técnica en Argentina de las personas del lugar, usuarios finales. El programa de capacitación detallado se determinará durante la reunión técnica. ----------

---------- 2/2 ----------

(Sobre el margen inferior derecho aparecen tres firmas ilegibles). ----------

---

Certifico que lo que antecede es traducción fiel al idioma español, del documento en idioma inglés, que he tenido ante mí, y al cuál me remito. En Buenos Aires, el día 2 de octubre del año dos mil quince. ----------

COLEGIO DE TRADUCTORES PUBLICOS
DE LA CIUDAD DE BUENOS AIRES
Corresponde a la Legalización
Nº 66108/15
PRISCILA CRISTINA QUELFFI

AGUSTINA SAUBIDET MARIN
TRADUCTORA PÚBLICA
INGLES
MAT. To. XIV Fo. 107 CAPITAL FEDERAL
INSCRIP. C.T.P.C.B.A. Nº 4993

MARIN
LICA
L FEDERAL
Nº 4993

ANEXO II

0425

<Número Sade/Especial a asignar>

<Número página a asignar>

0425

COLEGIO DE TRADUCTORES PÚBLICOS DE LA CIUDAD DE BUENOS AIRES

República Argentina
Ley 20305

LEGALIZACIÓN

Por la presente, el COLEGIO DE TRADUCTORES PÚBLICOS DE LA CIUDAD DE BUENOS AIRES, en virtud de la facultad que le confiere el artículo 10 inc. d) de la ley 20305, certifica únicamente que la firma y el sello que aparecen en la traducción adjunta concuerdan con los correspondientes al/a la Traductor/a Público/a SAUBIDET MARÍN, AGUSTINA que obran en los registros de esta institución, en el folio 307 del Tomo 14 en el idioma INGLÉS

Legalización número: **66109**

Buenos Aires, 05/10/2015

GUSTAVO A. SIGALOFF
JEFE DE LEGALIZACIONES
COLEGIO DE TRADUCTORES PÚBLICOS
DE LA CIUDAD DE BUENOS AIRES

ESTA LEGALIZACIÓN NO SE CONSIDERARÁ VÁLIDA SIN EL CORRESPONDIENTE TIMBRADO DE CONTROL EN LA ÚLTIMA HOJA DE LA TRADUCCIÓN ADJUNTA

Control interno: 26169266109

<Número Sade/Especial a asignar>

0425

By virtue of the authority vested in the COLEGIO DE TRADUCTORES PÚBLICOS DE LA CIUDAD DE BUENOS AIRES (Buenos Aires Sworn Translators Association) by Argentine law No. 20 305 section 10(d), I hereby CERTIFY that the seal and signature affixed on the attached translation are consistent with the seal and signature on file in our records.
The Colegio de Traductores Públicos de la Ciudad de Buenos Aires only certifies that the signature and seal on the translation are genuine; it will not attest to the contents of the document.
THIS CERTIFICATION WILL BE VALID ONLY IF IT BEARS THE PERTINENT CHECK STAMP ON THE LAST PAGE OF THE ATTACHED TRANSLATION.

Vu par le COLEGIO DE TRADUCTORES PÚBLICOS DE LA CIUDAD DE BUENOS AIRES (Ordre des Traducteurs Officiels de la ville de Buenos Aires), en vertu des attributions qui lui ont été accordées par l'article 10, alinéa d) de la Loi n° 20.305, pour la seule légalisation matérielle de la signature et du sceau du Traductor Público (Traducteur Officiel) apposés sur la traduction du document ci-joint, qui sont conformes à ceux déposés aux archives de cette Institution.
LE TIMBRE APPOSÉ SUR LA DERNIÈRE PAGE DE LA TRADUCTION FERA PREUVE DE LA VALIDITÉ DE LA LÉGALISATION.

Il COLEGIO DE TRADUCTORES PÚBLICOS DE LA CIUDAD DE BUENOS AIRES (Ordine dei Traduttori abilitati della Città di Buenos Aires) CERTIFICA ai sensi dell'articolo 10, lettera d) della legge 20.305 che la firma e il timbro apposti sulla qui unita traduzione sono conformi alla firma e al timbro del Traduttore abilitato depositati presso questo Ente. Non certifica il contenuto della traduzione sulla quale la certificazione è apposta.
LA VALIDITÁ DELLA PRESENTE CERTIFICAZIONE È SUBORDINATA ALL'APPOSIZIONE DEL TIMBRO DI CONTROLLO DEL CTPCBA SULL'ULTIMA PAGINA DELL'ALLEGATA TRADUZIONE.

Por meio desta legalização, o COLEGIO DE TRADUCTORES PÚBLICOS DE LA CIUDAD DE BUENOS AIRES (Colégio dos Tradutores Públicos da Cidade de Buenos Aires), no uso de suas atribuições e em conformidade com o artigo 10, alínea "d", da Lei 20.305, somente reconhece a assinatura e o carimbo do Tradutor Público que subscreve a tradução em anexo por semelhança com a assinatura e o carimbo arquivados nos registros desta instituição.
A PRESENTE LEGALIZAÇÃO SÓ TERÁ VALIDADE COM A CORRESPONDENTE CHANCELA MECÂNICA APOSTA NA ÚLTIMA FOLHA DA TRADUÇÃO.

COLEGIO DE TRADUCTORES PÚBLICOS DE LA CIUDAD DE BUENOS AIRES (Kammer der vereidigten Übersetzer der Stadt Buenos Aires). Kraft der Befugnisse, die ihr nach Art. 10 Abs. d) von Gesetz 20.305 zustehen, bescheinigt die Kammer hiermit lediglich die Übereinstimmung der Unterschrift und des Siegelabdruckes auf der beigefügten Übersetzung mit der entsprechenden Unterschrift und dem Siegelabdruck des vereidigten Übersetzers (Traductor Público) in unseren Registern.
DIE VORLIEGENDE ÜBERSETZUNG IST OHNE DEN ENTSPRECHENDEN GEBÜHRENSTEMPEL AUF DEM LETZTEN BLATT DER BEIGEFÜGTEN ÜBERSETZUNG NICHT GÜLTIG.

TRADUCCIÓN PÚBLICA ----------

Anexo 7----------

----------**Programa de Aceptación y Puesta en Marcha** ----------

----------**Para Maquinarias de Mantenimiento a Gran Escala** ----------

El siguiente plan es un Programa Preliminar de Aceptación y Puesta en Marcha para maquinarias de mantenimiento a gran escala, en tanto el programa definitivo será confirmado durante la reunión técnica.----------

---

1. CMEC enviará técnicos a las instalaciones del Contratante a fin de supervisar y guiar la descarga, instalación, puesta en marcha y aceptación de las maquinarias de mantenimiento a gran escala. ----------

2. Servicios de pre-aceptación para mantenimiento de maquinarias a gran escala. ----------

1) Chequeo de condición de vehículo estático. ----------

2) Guiar a usuarios en el reemplazo de distintos aceites. ----------

3) Puesta en marcha dinámica en el lugar. ----------

4) Prueba de funcionamiento. ----------

5) Capacitación respecto a los principios básicos, operación, seguridad y mantenimiento del equipamiento. ----------

6) Resolución de problemas. ----------

7) Trabajo de seguimiento de coches. ----------

ANEXO II

3. Durante el plazo de garantía, CMEC es responsable del envío de técnicos a fin de brindar servicios de post-venta en Argentina. El plan de servicio será ajustado de acuerdo a la situación de uso y trabajo real de las diferentes máquinas. ----------

ET MARIN
JBLICA
ITAL FEDERAL
A. Nº 4993

4. Los ingenieros de CMEC serán responsables de la capacitación técnica de las personas del lugar, usuarios finales. Para más detalles, por favor refiérase al Anexo-1 [Comunicaciones Técnicas sobre Maquinarias de Mantenimiento a Gran Escala].----------

---------- 1 ----------

(Sobre el margen inferior derecho aparecen tres firmas ilegibles). ----------

---

Certifico que lo que antecede es traducción fiel al idioma español, del documento en idioma inglés, que he tenido ante mí, y al cual me remito. En Buenos Aires, el día 2 de octubre del año dos mil quince. ----------

COLEGIO DE TRADUCTORES PUBLICOS
DE LA CIUDAD DE BUENOS AIRES
Corresponde a la Legalización
Nº 66108/15
PRISCILA CRISTINA GUIRFFI

AGUSTINA SAUBIDET MARIN
TRADUCTORA PÚBLICA
INGLES
MAT. To. XIV Fo. 107 CAPITAL FEDERAL
INSCRIP. C.T.P.C.B.A. Nº 4993

ANEXO II

0425

<Número Sade/Especial a asignar>

<Número página a asignar>

0425 354

COLEGIO DE TRADUCTORES PÚBLICOS DE LA CIUDAD DE BUENOS AIRES

República Argentina
Ley 20305

LEGALIZACIÓN

Por la presente, el COLEGIO DE TRADUCTORES PÚBLICOS DE LA CIUDAD DE BUENOS AIRES, en virtud de la facultad que le confiere el artículo 10 inc. d) de la ley 20305, certifica únicamente que la firma y el sello que aparecen en la traducción adjunta concuerdan con los correspondientes al/a la Traductor/a Público/a SAUBIDET MARÍN, AGUSTINA que obran en los registros de esta institución, en el folio 307 del Tomo 14 en el idioma INGLÉS

Legalización número: **66108**

Buenos Aires, 05/10/2015

GUSTAVO A. SIGALOFF
JEFE DE LEGALIZACIONES
COLEGIO DE TRADUCTORES PÚBLICOS
DE LA CIUDAD DE BUENOS AIRES

ESTA LEGALIZACIÓN NO SE CONSIDERARÁ VÁLIDA SIN EL CORRESPONDIENTE TIMBRADO DE CONTROL EN LA ÚLTIMA HOJA DE LA TRADUCCIÓN ADJUNTA

Control interno: 26169266108

<Número Sade/Especial a asignar>

0425355

By virtue of the authority vested in the COLEGIO DE TRADUCTORES PÚBLICOS DE LA CIUDAD DE BUENOS AIRES (Buenos Aires Sworn Translators Association) by Argentine law No. 20 305 section 10(d), I hereby CERTIFY that the seal and signature affixed on the attached translation are consistent with the seal and signature on file in our records.
The Colegio de Traductores Públicos de la Ciudad de Buenos Aires only certifies that the signature and seal on the translation are genuine; it will not attest to the contents of the document.
THIS CERTIFICATION WILL BE VALID ONLY IF IT BEARS THE PERTINENT CHECK STAMP ON THE LAST PAGE OF THE ATTACHED TRANSLATION.

Vu par le COLEGIO DE TRADUCTORES PÚBLICOS DE LA CIUDAD DE BUENOS AIRES (Ordre des Traducteurs Officiels de la ville de Buenos Aires), en vertu des attributions qui lui ont été accordées par l'article 10, alinéa d) de la Loi n° 20.305, pour la seule légalisation matérielle de la signature et du sceau du Traductor Público (Traducteur Officiel) apposés sur la traduction du document ci-joint, qui sont conformes à ceux déposés aux archives de cette Institution.
LE TIMBRE APPOSÉ SUR LA DERNIÈRE PAGE DE LA TRADUCTION FERA PREUVE DE LA VALIDITÉ DE LA LÉGALISATION.

Il COLEGIO DE TRADUCTORES PÚBLICOS DE LA CIUDAD DE BUENOS AIRES (Ordine dei Traduttori abilitati della Città di Buenos Aires) CERTIFICA ai sensi dell'articolo 10, lettera d) della legge 20.305 che la firma e il timbro apposti sulla qui unita traduzione sono conformi alla firma e al timbro del Traduttore abilitato depositati presso questo Ente. Non certifica il contenuto della traduzione sulla quale la certificazione è apposta.
LA VALIDITÁ DELLA PRESENTE CERTIFICAZIONE È SUBORDINATA ALL'APPOSIZIONE DEL TIMBRO DI CONTROLLO DEL CTPCBA SULL'ULTIMA PAGINA DELL'ALLEGATA TRADUZIONE.

Por meio desta legalização, o COLEGIO DE TRADUCTORES PÚBLICOS DE LA CIUDAD DE BUENOS AIRES (Colégio dos Tradutores Públicos da Cidade de Buenos Aires), no uso de suas atribuições e em conformidade com o artigo 10, alínea "d", da Lei 20.305, somente reconhece a assinatura e o carimbo do Tradutor Público que subscreve a tradução em anexo por semelhança com a assinatura e o carimbo arquivados nos registros desta instituição.
A PRESENTE LEGALIZAÇÃO SÓ TERÁ VALIDADE COM A CORRESPONDENTE CHANCELA MECÂNICA APOSTA NA ÚLTIMA FOLHA DA TRADUÇÃO.

COLEGIO DE TRADUCTORES PÚBLICOS DE LA CIUDAD DE BUENOS AIRES (Kammer der vereidigten Übersetzer der Stadt Buenos Aires). Kraft der Befugnisse, die ihr nach Art. 10 Abs. d) von Gesetz 20.305 zustehen, bescheinigt die Kammer hiermit lediglich die Übereinstimmung der Unterschrift und des Siegelabdruckes auf der beigefügten Übersetzung mit der entsprechenden Unterschrift und dem Siegelabdruck des vereidigten Übersetzers (Traductor Público) in unseren Registern.
DIE VORLIEGENDE ÜBERSETZUNG IST OHNE DEN ENTSPRECHENDEN GEBÜHRENSTEMPEL AUF DEM LETZTEN BLATT DER BEIGEFÜGTEN ÜBERSETZUNG NICHT GÜLTIG.

TRADUCCIÓN PÚBLICA----------

Anexo 8. ----------

Detalle de los tramos de vía a ser renovados mediante contratos de obra civil. ----------

Line	From	To	Km
San Martín	Est. Soldini	Est. Rufino	290
	Est. Albardón	Est. Palmira	230
Belgrano	Est. Coronda	Est. Nare	132
	Ramal C - KM 211	Est. Las Breñas	376
	Ramal C12 - KM 1436	Ramal C12 - KM 1411	25
	Ramal C12 - KM 1332	Ramal C12 - KM 1202	130
	Ramal C12 - KM 1139	Est. Cnel Mollinedo	123
	Est. Avia Terai	Est. Barranqueras	205
TOTAL			1511

Se prevé la renovación de un total de 1.511 km y el mejoramiento de no menos de 321 km en tramos a definir. Se renovaran 991 km de la Línea Belgrano y 520 km de la Línea San Martín. ----------

La renovación de la vía incluirá la construcción de pasos a desnivel/pasos elevados en puntos críticos de aglomeraciones urbanas, pasos en ciudades y rectificaciones de curvas. ----------

Las características de la vía, con el fin de homogenizar la red y permitir un completo aprovechamiento de las inversiones, serán las siguientes: ----------

Rieles: UIC 54 ----------

Durmientes: Monoblock de hormigón pretensado (1540 km) ----------

Fijaciones: Doblemente elástica ----------

Balasto: 30 cm de espesor ----------

Capacidad portante: 22 t/eje en trocha métrica y 25 t/eje en trocha ancha ----------

Velocidad máxima: 90 km/h ----------

Rectificaciones de curvas donde sea posible. Radio mínimo 300m. ----------

ANEXO II

Cumplimiento de normas argentinas (FA). ----------

--- En donde sea posible, se construirá una vía nueva paralela a la traza actual con el fin de mantener la vía existente como de servicio permitiendo en el futuro la operación con doble vía. ----------

--- El plazo de construcción de la obra está condicionado a la existencia de disponibilidad de Facilidad Disponible en los términos del Contrato de Préstamo. -------

---------- 1/1 ----------

(Sobre el margen inferior derecho aparecen dos firmas ilegibles). ----------

---

Certifico que lo que antecede es traducción fiel al idioma español, del documento en idioma inglés, que he tenido ante mí, y al cual me remito. En Buenos Aires, el día 2 de octubre del año dos mil quince. ----------

COLEGIO DE TRADUCTORES PUBLICOS
DE LA CIUDAD DE BUENOS AIRES
Corresponde a la Legalización
Nº 66115/15
PRISCILA CRISTINA GUELFFI

AGUSTINA SAUBIDET Martín
TRADUCTORA PÚBLICA
INGLES
MAT. To. XIV Fo. 107 CAPITAL FEDERAL
INSCRIP. C.T.P.C.B.A. Nº 4[illegible]

[redacted]

ANEXO II

0425

COLEGIO DE TRADUCTORES PÚBLICOS DE LA CIUDAD DE BUENOS AIRES

República Argentina
Ley 20305

LEGALIZACIÓN

Por la presente, el COLEGIO DE TRADUCTORES PÚBLICOS DE LA CIUDAD DE BUENOS AIRES, en virtud de la facultad que le confiere el artículo 10 inc. d) de la ley 20305, certifica únicamente que la firma y el sello que aparecen en la traducción adjunta concuerdan con los correspondientes al/a la Traductor/a Público/a SAUBIDET MARÍN, AGUSTINA que obran en los registros de esta institución, en el folio 307 del Tomo 14 en el idioma INGLÉS

Legalización número: **66115**

Buenos Aires, 05/10/2015

GUSTAVO M. SIGALOFF
JEFE DE LEGALIZACIONES
COLEGIO DE TRADUCTORES PÚBLICOS
DE LA CIUDAD DE BUENOS AIRES

ESTA LEGALIZACIÓN NO SE CONSIDERARÁ VÁLIDA SIN EL CORRESPONDIENTE TIMBRADO DE CONTROL EN LA ÚLTIMA HOJA DE LA TRADUCCIÓN ADJUNTA

Control interno: 26169266115

<Número Sade/Especial a asignar>

0425

359

By virtue of the authority vested in the COLEGIO DE TRADUCTORES PÚBLICOS DE LA CIUDAD DE BUENOS AIRES (Buenos Aires Sworn Translators Association) by Argentine law No. 20 305 section 10(d), I hereby CERTIFY that the seal and signature affixed on the attached translation are consistent with the seal and signature on file in our records.
The Colegio de Traductores Públicos de la Ciudad de Buenos Aires only certifies that the signature and seal on the translation are genuine; it will not attest to the contents of the document.
THIS CERTIFICATION WILL BE VALID ONLY IF IT BEARS THE PERTINENT CHECK STAMP ON THE LAST PAGE OF THE ATTACHED TRANSLATION.

Vu par le COLEGIO DE TRADUCTORES PÚBLICOS DE LA CIUDAD DE BUENOS AIRES (Ordre des Traducteurs Officiels de la ville de Buenos Aires), en vertu des attributions qui lui ont été accordées par l'article 10, alinéa d) de la Loi n° 20.305, pour la seule légalisation matérielle de la signature et du sceau du Traductor Público (Traducteur Officiel) apposés sur la traduction du document ci-joint, qui sont conformes à ceux déposés aux archives de cette Institution.
LE TIMBRE APPOSÉ SUR LA DERNIÈRE PAGE DE LA TRADUCTION FERA PREUVE DE LA VALIDITÉ DE LA LÉGALISATION.

Il COLEGIO DE TRADUCTORES PÚBLICOS DE LA CIUDAD DE BUENOS AIRES (Ordine dei Traduttori abilitati della Città di Buenos Aires) CERTIFICA ai sensi dell'articolo 10, lettera d) della legge 20.305 che la firma e il timbro apposti sulla qui unita traduzione sono conformi alla firma e al timbro del Traduttore abilitato depositati presso questo Ente. Non certifica il contenuto della traduzione sulla quale la certificazione è apposta.
LA VALIDITÁ DELLA PRESENTE CERTIFICAZIONE È SUBORDINATA ALL'APPOSIZIONE DEL TIMBRO DI CONTROLLO DEL CTPCBA SULL'ULTIMA PAGINA DELL'ALLEGATA TRADUZIONE.

Por meio desta legalização, o COLEGIO DE TRADUCTORES PÚBLICOS DE LA CIUDAD DE BUENO AIRES (Colégio dos Tradutores Públicos da Cidade de Buenos Aires), no uso de suas atribuições e em conformidade com o artigo 10, alínea "d", da Lei 20.305, somente reconhece a assinatura e o carimbo do Tradutor Público que subscreve a tradução em anexo por semelhança com a assinatura e o carimbo arquivados nos registros desta instituição.
A PRESENTE LEGALIZAÇÃO SÓ TERÁ VALIDADE COM A CORRESPONDENTE CHANCELA MECÂNICA APOSTA NA ÚLTIMA FOLHA DA TRADUÇÃO.

COLEGIO DE TRADUCTORES PÚBLICOS DE LA CIUDAD DE BUENOS AIRES (Kammer der vereidigten Übersetzer der Stadt Buenos Aires). Kraft der Befugnisse, die ihr nach Art. 10 Abs. d) von Gesetz 20.305 zustehen, bescheinigt die Kammer hiermit lediglich die Übereinstimmung der Unterschrift und des Siegelabdruckes auf der beigefügten Übersetzung mit der entsprechenden Unterschrift und dem Siegelabdruck des vereidigten Übersetzers (Traductor Público) in unseren Registern.
DIE VORLIEGENDE ÜBERSETZUNG IST OHNE DEN ENTSPRECHENDEN GEBÜHRENSTEMPEL AUF DEM LETZTEN BLATT DER BEIGEFÜGTEN ÜBERSETZUNG NICHT GÜLTIG.

ANEXO II

0425

MINISTERIO DEL INTERIOR Y TRANSPORTE FOLIO 360

AMENDMENT N° 2

of the

AMENDED AND RESTATED CONTRACT

for

Belgrano Cargas Railway Rehabilitation Project

by and between

THE MINISTRY OF INTERIOR AND TRANSPORTATION
REPUBLIC OF ARGENTINA

as the Principal

and

CHINA MACHINERY ENGINEERING CORPORATION (CMEC)

as CMEC

ANEXO II

0425

This Amendment is made on September 8th, 2015 by and between:

THE MINISTRY OF INTERIOR AND TRANSPORTATION - REPUBLIC OF ARGENTINA, having its principal address at: 25 de Mayo 101, City of Buenos Aires, Republic of Argentina, represented by the Minister of Interior and Transportation of Argentina, Mr. Aníbal Florencio Randazzo (hereinafter referred to as the "Principal") on one party, and

CHINA MACHINERY ENGINEERING CORPORATION (hereinafter referred to as "CMEC"), with its principal address at 178 Guang An Men Wai Street, Xicheng District, Beijing 100055, China, represented by Mr. SUN Bai, Chairman of CMEC, for the other party.

Whereas, the Argentine Republic is implementing public policies related to Railways aiming at strengthening and improving the Railway system.

Whereas Belgrano Cargas y Logistica S.A. Railway Network serves as the key vehicle to achieve the following political and economic purposes (a) to improve the transportation capacity of the country, (b) to connect the grain production regions, ports and consuming areas, (c) to improve regional economy; therefore, the Principal has presented a complete project for the Rehabilitation of the Belgrano Cargas Railway System;

Whereas, on March 11th, 2010, the Contract for Belgrano Cargo Railway Rehabilitation Project was signed between the Secretary of Transportation and CMEC whose corporate name was at that time "China National Machinery & Equipment Import & Export Corporation", together with its General Conditions of Contract, Particular Conditions of Contract (for Supply of Materials and Plant), Particular Conditions of Contract (for Construction and Services), (hereinafter referred as the "Original Contract"). The Original Contract was amended by Amendments I to VI dated July 13th, 2010, October 8th, 2010, April 7th, 2011, October 7th, 2011, June 25th, 2012, and September 25th 2013 respectively) hereinafter referred to, together with any other amendment to the Original Contract and other agreements or contracts for the Project between the Parties dated prior to this Agreement, as the "Previous Amendments"). Whereas, on September 25th 2013, the Parties signed an Agreement for the supply of rails, sleepers, clip fasteners and other components (hereinafter referred as the "Previous Supply Agreement"). Hereinafter the Original Contract, the Previous Amendments and the Previous Supply Agreement are jointly defined as the "Previous Agreements";

Whereas, on June 25th, 2012 the Buyer Credit Facility Agreement for up to US$ 2,099,965,834 supported by SINOSURE was entered into by the MINISTRY OF ECONOMY AND PUBLIC FINANCE OF THE REPUBLIC OF ARGENTINA and CHINA DEVELOPMENT BANK CORPORATION and INDUSTRIAL AND

COMMERCIAL BANK LIMITED (hereinafter, as amended from time to time, referred as the "Credit Agreement").

Whereas the above Parties signed the Amended and Restated Contract for Belgrano Cargo Railway Rehabilitation Project on December 4th, 2013 (hereinafter referred to as the Amended and Restated Contract), which modified and superseded the Previous Agreements.

Whereas the conditions listed in Article 36.1 of the Amended and Restated Contract have been satisfied on September 19th, 2014; therefore the Amended and Restated Contract is actually effective.

Whereas, the Parties have agreed to modify certain terms and conditions of the Amended and Restated Contract.

Now, therefore, in consideration of the foregoing, of the agreements and consents set forth herein and for other good valuable consideration, the receipt and sufficiency of which are hereby acknowledged, and intending to be legally bound hereby the Principal and CMEC agree as follows:

ARTICLE-1 DEFINITIONS AND INTERPRTATION

1.1. Definitions. Capitalized terms used under this Amendment and not otherwise defined in this Amendment shall have the meaning ascribed to the in the Amended and Restated Contract.

1.2. Rules of Interpretation. The rules of interpretation set forth in Sections 1.2, 1.3, and 1.4 of the Amended and Restated Contract shall apply to this Amendment.

ARTICLE-2 AMENDMENTS

2.1. Section 1.1.9 of the Amended and Restated Contract is hereby deleted in its entirety and replaced with the following language:

1.1.9 ***"Construction"*** *means the works to be performed throughout the Belgrano Cargas y Logistica S.A. railway lines including the total renovation of one thousand and five hundred eleven kilometers (1511 km) and the improvement of no less than three hundred and twenty one kilometers (321 km) of the Belgrano Cargas y Logistica S.A. railway lines, as defined in* ***ANNEX-18****.*

2.2. Section 1.1.17 of the Amended and Restated Contract is hereby deleted in its entirety and replaced with the following language:

1.1.17 ***"Heavy Machinery"*** *means the machinery detailed in* ***ANNEX-2.3*** *of this Agreement and the Containers.*

2.3. Section 1.1.29 of the Amended and Restated Contract is hereby deleted in its entirety and replaced with the following language:

1.1.29 ***"Rolling Stock"*** *means the locomotives and wagons, large-scale maintenance machinery, wheels, axles, bearings, couplers, air braking systems, lathes, other spare parts for wagons and other components detailed in* ***ANNEX-2.2*** *of this Agreement*

2.4. Section 6.3 of the Amended and Restated Contract is hereby deleted in its entirety and replaced with the following language:

6.3. ***Performance Price:*** *70% (seventy percent) of the Performance Price shall be paid through the disbursements to be made pursuant to the Credit Agreement and upon presentation of the following documents in proportion to the progress of the Construction:*

a. Progress Certificate of the Construction issued by the Principal for the amount of the Construction completed. The Principal is entitled to delegate the issuance of Progress Certificate of the Construction on any of the Builders.

b. Progress Supervision Certificate of the Construction issued by CMEC for the amount of the Construction completed.

c. Commercial invoice issued by the Builder/s or the Sub-Builder/s for the works corresponding to each applicable set of Progress Certificate and Progress Supervision Certificate.

d. Commercial invoice issued by CMEC corresponding to the monitoring and payment services mentioned in ARTICLES 18.4 to 18.6.

2.5. The parties agree that the length of the rails will be 18 meters undrilled. The rest of the Technical Specifications detailed in ANNEX 2.1 of the Contract will remain unaltered.

2.6. ANNEX 2.2 – Technical Specifications for Rolling Stock – is hereby amended to insert the Meeting Minutes of Technical Communications on Large Scale Maintenance Machinery, technical specification of the Lathes attached hereto, and list of other spare parts for wagons as Annexes 1, 2 and 3 respectively.

2.7. ANNEX 2.3 – Technical Specifications of the Heavy Machinery – is hereby amended to modify the technical specifications of the Caterpillar machinery and include the ones of the Containers attached hereto, as Annex 4. -

2.8. ANNEX 8 - Total Price Break Down - of the Amended and Restated Contract is hereby deleted in its entirety and replaced with the one attached hereto as Annex 5.

2.9. ANNEX 12 – Delivery Schedule - of the Amended and Restated Contract may be modified and adapted to the real possibilities of deliverance, in writing by duly authorized representatives of the parties hereto. The Principal authorizes the persons designated under Resolution of the Ministry of Interior of Transportation N 1011/2014 to negotiate and define delivery schedules for the Contracted Goods.

2.10. Annex 14 – Commissioning and Acceptance Program – is hereby amended to insert the Commissioning and Acceptance Program for Lathes and a Commissioning and Acceptance Program for Large Scale Maintenance Machinery attached hereto, as Annexes 6 and 7 respectively.

2.11. Annex 18 – Construction Works - of the Amended and Restated Contract is hereby deleted in its entirety and replaced with the one attached hereto as Annex 8.

ARTICLE-3 ACKNOWLEDGEMENTS.

3.1. Each of the Parties hereto hereby acknowledges and agrees that:

a. the terms and conditions of the Amended and Restated Contract in effect as of the Effectiveness of this Amendment shall continue in full force and effect unchanged except as amended hereby; and

b. no provision of this Amendment shall be deemed to be a consent, waiver or modification of any term or condition of the Amended and Restated Contract (except as expressly provided in Article 2 of this Amendment) or any of the instruments or the documents referred to therein.

c. except as expressly amended hereby, all the provisions of the Amended and Restated Contract shall continue to be, and shall remain in full force and effect in accordance with its terms.

3.2. This Amendment is made out in English and Spanish. In case of any conflict and ambiguity, English version will prevail.

3.3. This Amendment is made out in 6 (six) original copies of each language, each of 3 (three) to be kept in the custody of each Party signing the Contract, all copies having the same validity.

ARTICLE-4 EFFECTIVENESS OF THE AMENDMENT.

4.1. This Amendment will be effective after all of the following conditions have occurred:

a. Signature of the Amendment by both Parties.

b. The prior written consent of the Facility Agent under the Credit Agreement.

c. The approval of this Contract by the corresponding authority of the Republic of Argentina.

IN WITNESS WHEREOF, the parties hereto have caused this Amendment to be signed by their duly authorised representatives as of the day and year written below.

Representative of the Principal

Signature: _____

Name: Cdor. Aníbal Florencio Randazzo

Title: Minister

Ministry of Interior and Transportation, Republic of Argentina

Representative of CMEC

Signature: _____

Name: SUN Bai

Title: Chairman

China Machinery Engineering Corporation (CMEC)

0425

13 NOV. 2015

MeetingMinutesofTechnicalCommunicationsOn the Large-Scale MaintenanceMachinery For Belgrano Cargo Railway Rehabilitation Project

Date: 18-08-2015

Location: Buenos Aires, Argentina

Attendants:

The Argentinean Party:
1. Ing. Martin De Bony – SOFSE

The Chinese Delegation coordinated by China Machinery Engineering Corporation (CMEC), and Manufactures representatives composedby:

- Beijing Feb.7th Railway Transportation Equipment Co., Ltd (BRE)
- Locomotive Company of Taiyuan Railway Transportation Equipment Co., Ltd (Taiyuan Locomotive)
- China Railway Large Maintenance Machinery Co., Ltd. Kunming (KCRC)

1.	Cui Zhitao	CMEC, Engineer
2.	Zhang Binbin	CMEC, Engineer
3.	Hu Ronghui	BRE, Deputy chief economist senior Engineer
4.	Sun Bo	BRE, Engineer
5.	Wang Xiaojian	Taiyuan Locomotive, Chief of International Department
6.	Yang Xuan	KCRC, Deputy chief of international department
7.	Xie Jiangsheng	KCRC, Engineer

Whereas

(1) The Amended and Restated Contract for Belgrano Cargo Railway Rehabilitation Project (the "Contract") was signed on December 4th 2013 and its Amendmenton January 31st 2014 by the Ministry of Interior and Transportation of the Republic of Argentina (the "Principal") and China Machinery Engineering Corporation (hereinafter "CMEC").

(2) The conditions listed in Article 36.1 of the Contract have been satisfied on September 19th,2014; therefore the Amended and Restated Contract is actually effective.

Ing. MARTIN DE BONY
SUBGERENTE
OPERADORA FERROVIARIA
SOCIEDAD DEL ESTADO

(3) The Principal and CMEC are negotiating and amendment to modify certain terms and conditions of the Contract (the "Amendment").

(4) The Principal and CMEC are willing to aim to add to the Contract the supply of Large-Scale Maintenance Machineryto the Contract.

(5) The Principal has entrusted SOFSE, to inspect premises ofthePotential Manufacturers and conduct technical communications with the Chinese delegation on the Large-Scale Maintenance Machinery.

NOW THEREFORE and in consideration of the technical discussions held during and after the track railway inspection, SOFSE and CMEC agree as follows:

1. CMEC and Factories Manufactures Railways infrastructure visits have already been done

From July 20 to July 23rd, 2015; SOFSE, CMEC and the different Manufacturers factories representatives visited the principal infrastructure including all the different types of tracks (wooden sleepers and concrete sleepers) and stations, as well as the infrastructure of the Railway Lines Sarmiento, Mitre, San Martín, Roca and Belgrano Sur, in Argentina. They also, had several meetings from July 24 to August 18th at SOFSE's offices, and agreed upon technical specifications of the present minute.

2. Technical Specifications

See the attached:

- Annex-1 [General Specifications of the Large-Scale Maintenance Machinery]
- Annex-2[Technical Specifications of the Rail Grinding Machine]
- Annex-3[Technical Specifications of the Tamping, Dynamic Stability and Ballast Regulating Machines]
- Annex-4[Technical Specifications of the RailCar]
- Annex-5[Technical Specifications of the Rail Flaw Detection and Measurement.
- Annex-6 [Final prices for the Large Scale Maintenance Machinery]

3.Final project design and preliminarily list of spare parts

The final project design for the Large-scale Machinery together with the preliminary list for spare parts for the two yearoperation will be delivered by CMEC in September 21st, both documents will need to be approved by SOFSE.

4. Warranty Period

CMEC will be responsible for the warranty period of 24 months for all the large-scale Machinery. The warranty period begins after accomplishing satisfactorily

Ing. MARTIN DE BONY
SUBGERENTE DE ...
OPERADORA FERROVIARIA
SOCIEDAD DEL ESTADO

all the physical and FEA tests and signing of the provisional reception of the equipment in Argentina.

5. Inspections

Two factory visits will be conducted by the Principal during the manufacturing period. One visit is to attend the physical testing, and the other is to do final inspection before shipping (for the grinding machine, another visit will be conducted during assembly of the grinding unit). Two representatives will be sent to China each time. All the expenses of the inspections will be covered by CMEC.

6. Technical Training

The costs for personnel designated by SOFSE, including air flight tickets, mobility, high standard accommodations and transfers for technical training in China will be covered by CMEC. The training details are defined in the Annex 1.

7. Production schedule

SOFSE, CMEC and manufacturers representatives agree to the following schedule of production, test and delivery of the equipment. Refer to Annex 1

The delivery period shall begin on the date the Amendment is executed considering the final approvals of the design drawings are ready. If at the date of the execution of the Amendment final design drawings are not ready, the delivery period will start after two months have passed since the signature of the Amendment.

8. Supply Price for the Large Scale Maintenance Machinery

The supply price for the Large Scale Maintenance Machinery is attached as Annex 6 (Final Prices for the Large Scale Maintenance Machinery) and shall be firm and fixed and not subject to adjustments.

9. Miscellaneous

The parties agree that this minute includes the final understanding between them and supersedes any other signed document among SOFSE and CMEC.

The execution of this minute will not be understand by the parties as the obligation of SOFSE of purchasing the Large Scale Maintenance Machinery. SOFSE will submit this minute to the Principal, for his approval. In case this approval occurs, the Principal and CMEC will include the Large Scale Maintenance Machinery in the Amendment.

This Meeting Minutes are signed on 19th August 2015, by

SOFSE

CMEC

Ing. MARTIN DE EON
SUBGERENTE DE VIAS Y OBRA
OPERADORA FERROVIARIA
SOCIEDAD DEL ESTADO

Representative:

Ing. MARTIN DE BON
SUBGERENTE DE VIAS Y OBRA
OPERADORA FERROVIARIA
SOCIEDAD DEL ESTADO

Name: Ing. De Bony Martin

Title: Infrastructure Manager

Representative:

Name: Zhu Li

Title: Deputy General Manager of Belgrano Cargo Railway Rehabilitation Project

ANNEX 1

GENERAL TECHNICAL SPECIFICATIONS OF THE LARGEST RAIL MAINTENANCE MACHINERY

ANNEX 1

1 EQUIPMENT TECHNICAL SPECIFICATIONS

1.1. STANDARDS AND CONTROL PROTOCOLS

Not only the Chinese Republic Standards must be fulfilled but in addition the following European, American Standards and Quality procedures must be fulfilled.

CMEC will provide all Chinese standards in English or Spanish applicable to the Maintenance Machinery, as listed in the Minutes and Annexes in two (2) printed copies and 1 (one) digital copy. The translation of the Chinese standards will meet applicable quality standards.

The following are these Standards and Quality Protocols to be fulfilled by the Maintenance Machinery:

- **Wheels: we require a copy of the following protocols:**

  Quantity: One set by BATCH PRODUCED:

  - Dimensional control of the wheels.
  - Hardness determination.
  - Chemical composition and metallographic analysis.
  - Ultrasonic and Magnaflux tests from critical zones of the wheels, in order to reveal cracks and porosities.
    - **840 mm: RAIL GRINDING MACHINE - TB/T 2817-1997**
    - **915 mm: RAIL CAR - TB/T 2817-1997**
    - **915 mm: TAMPING & STABALIZING - TB/T 2817-1997**
    - **840 mm: BALLAST REGULATOR - TB/T 2817-1997**
    - **915 mm: RAIL FLAW DETECTION & MEASUREMENT MACHINE TB/T 2817-1997**
  - The wheel must be stamped mark (Factory Name, Nº of batch, number of wheel)
  - Wheel profile EN13715-1/40 or NEFA 706 (thread profile – Perfil Normal)

- **Axles: we require a copy of the following protocols:**

  Quantity: One set by BATCH PRODUCED:

  - Dimensional control of the Axles.

- Hardness determination.
- Chemical composition and metallographic analysis.
- Ultrasonic and Magnaflux tests from critical zones of the axles, in order to reveal cracks and porosities.
- To be according to AXLE TB/T 2945-1999

• **Wheelset:** we require a copy of the following protocols:

Quantity: One set by MOUNTED WHEEL:

- The pressing process will be the parts at ambient temperature
- Pressing diagram force vs displacement.
- CHINESES STANDARD: TB/T 1463-2006

Quantity: One set by PRODUCED WHEELSET:

- Dimensional control of the wheels.
- Wheel set wheels alignment.

• **Bogie Frame: : we require a copy of the following protocols:**

Quantity: One set by MODEL OF FRAME:

- Load and fatigue "CLASS TEST" made by FEA method
- Standard required for design and approval: UIC 515 (Trailed Bogies) or UIC 615 (Motor Bogies). If the same frame will be used for the two kinds of bogies, use only UIC 615 for THE TWO KINDS.

Quantity: One set by PRODUCED BATCH:

- Material tests and analysis

Quantity: One set by EACH PRODUCED FRAME:

- Dimensional control of the frame – wheelbase and diagonals.
- Welding cracks control.

• **Coupling Hook: we require a copy of the following protocols:**

Quantity: One set by PRODUCED BATCH:

- Traction effort test for hook and link.
- Dimensional control protocol.

Quantity: One set of tests reports by COUPLING ASSEMBLY (HOOK and LINK):

- Crack essays by non-destructive methods.
- The Principal asked the coupling hook for the wide gauge to change to be according to UIC 520, CMEC coordinated and all factories finally agree to adopt UIC 520 coupling hook, while the height of hook center to rail surface is 1055,50 mm (-11 mm ; -35mm).
- The Principal require that meter gauge must use NEFA 289 (A.A.R. 10-A) and NEFA 343, while the height automatic coupler center to rail surface is 804 mm (-11 mm ; -35mm).

- **Side Buffers: we require a copy of the following protocols:**
  Quantity: One set by PRODUCED BATCH:

  - Compression test, loading and unloading, with energy absorption curve.
  - Dimensional control protocol.
  - The Principal require the sides buffers for the wide gauge to be according to UIC 526-1 (blueprint Nº NEFA 429).
  - Meter gauge does not use side buffers.

- **Internal Combustion Engines: we require a copy of the following protocols:**
  Quantity: One set by ENGINE MODEL

  - Dynamometric Bench Test Curves.
  - Standards required: SAE J1349
  - Engines CUMMINS: SAE J 1995
  - Engines DEUTZ: ISO 14396

The Principal require the signature of performance curve by DEUTZ or CUMMINS of the batch.

Coupler Generators:

- RAIL GRINDING MACHINE: Stamford
- RAIL CAR: Yamaha
- TAMPING & STABILIZING: Yamaha
- BALLAST REGULATOR: Yamaha
- RAIL FLAW DETECTION & MEASUREMENT MACHINE: Stamford

1.2. STRUCTURAL SAFETY

- **COMPRESSION TEST: we require a copy of the following protocols:**

  Quantity: One test by TYPE of MACHINE

ALL FEA TESTS

- Structural simulation by FEA.
- Test chart for the structure defining critical points to be determined by FEA analysis using EN 12663 - 2010. The physical testing results will be compared with the FEA analysis. The final longitudinal dimension of the structure, after the test, must be equal to the measures obtained before the load application.
- Test will be carried out without and with additional weights simulating auxiliary equipment and work static loads over the platform.
- There will be neither cracks nor warping after unloading.
- Vibration frequency and modes - EN 12663-2010 Point 6.9.
- Fatigue strength – EN 12663-2010 Point 7.3.
- Torsional loads including accidental jacking with 3 jacks in workshop.
- Jacking from one of the four designs points simulating a wheel derailment only with the machinery weight.
- Normal lifting with hoist from provided points.
- Normal jacking from provided reinforced points in the underframe.
- All FEA tests would be made and certificated by an external enterprise.
- Impact test up to 36 km/h – EN 12663-2010. Point 8.4.

ALL PHYSICAL TESTS

All parties agree to adopt EN12663-2010, while the physical static load test items for structural safety are as the following:

	Test item	Tamping	Stabilizer	Ballast regulator	Rail car	Rail grinder	Rail Detection and measurement
Static Load Test	Compression force at buffers and/or coupler attachment - Table 2	1250 KN					
	Tensile force at coupler attachment - Table 5	800 KN					
	vertical loads according to Table 9	1,3x g x (m1 + m4)					
	lifting load according to Table 10	1,1 x g x (m1 + m2)					
	Lifting and jacking the whole vehicle at the specified positions Table 11	1,1 × g × (m1 + 2 ×m2)					

BRE \ KUNMING \ QISHUYAN: Agree to do the compression test, while TAIYUAN do one test of 1676 mm Railcar, under condition agrees to increase reasonable spare parts to guarantee quality.

- Pressure test of all the hydraulic and pneumatic systems.
- Load Gauge test with flexible mask GVO 3234 y GVO 3236.
- Dynamometric test measuring the tractive effort in the hook (Rail Car Only).
- For all machines, impact test up to 5 km/h conducted by the factory and without external certificate. EN 12663-2010 Point 6.5.
- All physical tests would be made and certificated by an external enterprise.

1.3. FLAME SAFETY

- **TOXICITY AND FLAMMABILITY TESTS: the following test Protocols will be required:**

Quantity: One test for EACH TYPE of major materials listed in the following used in interiors and cockpit.

- Environmental conditions: no tunnel.
- Protocol Charts and reports.
- All parties agree to adopt DIN 5510 for furniture, chairs, operation panels and floor.

1.4. WIRING CONDUCTORS

- **TOXICITY AND FLAMMABILITY TESTS: the following test Protocols will be required:**

Quantity: One set by PRODUCED BATCH:

- **All insulating materials will be Low Smoke Zero Halogen (LS0H)**
- Standards to be applied: IEC 60332-1-2-2004
- Protocol Charts and reports

- **FLEXIBILITY**

- **The conductors will be of the Grade 6 of the Standard IEC 60228, with exception of those fixed or in rigid conduits.**
- Standards to be applied to the tests: IEC 60228
- Protocol Charts and reports

1.5. PAINTING

- The machines have at least three layers of polyurethane paint and a layer of anti-rust paint.

- The color will be defined in the design meetings.
- Both combinations the epoxy-polyurethane process with polyurethanic high solid Clear finish.

1.6. GLAZING

- **WINDSHIELD, the following test Protocols will be required:**
  Quantity: One set by PRODUCED BATCH:

  - Standards to be applied: GB 18045-2000
  - There will be electric fan in the up -front of windshield.
  - Laminated glass with air chamber and electric defroster, three glasses: (6 mm + 6 mm air film + 5 mm + 2 mm pvc + 5 mm).

- **SIDE GLAZING: The following test Protocols will be required:**
  Quantity: One set by PRODUCED BATCH:

  - Protocol Charts and reports
  - All parties agree to adopt GB 18045-2000
  - Laminated glass with air chamber, two glasses:
    - Tamping machine, stabilizer and ballast regulator: 4 mm + film 0.5mm +4 mm
    - Rail car: 4 mm+ 6 mm air + 4mm
    - Grinding machine: 6 mm + 12 mm air + 6mm
    - Rail flaw detection and line measurement: 6mm + 12mm air + 6mm

1.7. OLEOHYDRÁULIC SYSTEMS

Quantity: One test by type of Machine.

- Components layout chart and description, working pressures, caudal, estimated time of Life of the components.
- FULL POWER Test
- Fluid temperature while in Full Power tests.

Quantity: ONE BY EACH UNIT PRODUCED.

- Final Tests Protocols including tightness control, real working pressures and operation of the directional valves.

1.8. DYNAMIC TESTS

- **Acceleration test, performed with electronic speedometer and/or piezoresistive accelerometer, linked with a data-logging system.**
  - **Quantity: ONE test by each MACHINE MODEL**
  - Documents required Test report with acceleration vs speed chart.
  - The accelerometer must be capable of reading accelerations within the range 0 – 5 m/seg²

- **Brake Test performed with electronic speedometer and/or piezo resistive accelerometer, linked with a data logging system**

  Quantity: ONE test by each MACHINE MODEL.
  - Documents required Test report with acceleration vs. speed and deceleration vs. distance charts.
  - The accelerometer must be capable of reading accelerations within the range 0 – 5 m/seg².
  - Twice tests will be performed: 2 with maximum service brake and 2 with Emergency Brake.

THE PRINCIPAL WILL RUN THE MACHINERY ON THEIR TRACKS SATISFYING THE ARGENTINA STANDARDS OF TEST AND THE FACTORY WILL PROVIDE TEST DATA WITH THEIR OWN INSTRUMENTS FOR THE TEST.

1.9. COMPLEMENTARY TESTS

- Quantity: ONE test by each MACHINE MODEL.
  - Time of compressed air charging from 0 bar to the governor cut-off pressure for the entire pneumatic system.
  - The same test with the Backup compressor.
  - Recovery time from an Emergency Brake Stop until the governor cut-off pressure.
  - Quantity One test by Produced Batch.

For all machines, there is no backup compressor, while EMERGENCY BRAKE TEST REPORT to be provided.

The principal require in service and emergency conditions, with straight, dry and clear track, running at 80 km/h.

- Service brake deceleration: 0.7 m/s²
- Emergency brake deceleration: 0.8 m/s²

~~During the test of emergency brake if a wheel result with a flatted the Principal will be responsible to fix the problem.~~

Brake equipment brand will be from Knorr Bremse CCB26, Wabtec or Wabtec MTZ (Macedonia)

1.10. LIFE CYCLE

For all Machines of this procurement must be at least of 30 years with a Mid-Life Rebuilding/Upgrade (15 years).

BRE: 30 years of life with 12 years or 12.000 hours, which earlier, to upgrade, under condition of suitable maintenance, repair and operation.

KUNMING: The design life for this machine is 30 years. Annual working hours: 1.000 hours.

15 years or 15.000 hours which earlier to overhaul with suitable machine maintenance, repaired operation.

TAIYUAN: the design life for this machine is 30 years with 20.000 hours or 12 years, which earlier, to upgrade under condition of suitable maintenance, repair and operation.

1.11. WELDINGS

All welding will comply with the rules of EN 15085.

1.12. TEST SURVEY

DESCRIPTION	GROUP	DOCUMENTS
Wheel measurement	BOGIE	Measurement Protocol
Wheel hardness	BOGIE	Measurement Protocol
Chemical and Metallographic tests	BOGIE	Protocols, Pictures or Plates.
Sampling Control of Bogie Frame welding.	BOGIE	Protocols, Pictures or RX Plates
Wheel Mounting	BOGIE	Pressing Force vs displacement Chart
Sampling Control of Body Frame welding.	FRAME STRUCTURE	Protocols, Pictures or RX Plates
Static load and fatigue(FEA)	BOGIE	Protocols, Pictures or RX Plates
Compression test and impact Test.	FRAME STRUCTURE	Stress and Strain protocols and Charts.
Engine Bench Tests	PROPULSION	Torque and Delivered Power Chart
Tractive test of the Hook and Link	COUPLING AND BUFFERING	Loading and Unloading Chart, deformations chart.

Side Buffer Test	COUPLING AND BUFFERING	Loading and Unloading Chart, deformations charts and amount of energy accumulated or delivered, Hysteresis.
Structural FEA fatigue analysis and impact test.	FRAME STRUCTURE	Videos, Screenshots. Test Report.
Material Flammability and Toxicity tests	INTERIOR LINING	CMEC presence in some test and Test Reports
Flammability and toxicity testing of electrical conductors	SISTEMA ELÉCTRICO	Presence Protocol testing and results
Glazing materials test	INTERIOR LINING	CMEC presence in some test and Test Reports
Dynamic test and whole equipment test	FINAL TEST	Test Report
Oleo-hydraulic system test	Included in FINAL TEST	Test Report
Air charge test an recovery	Included in FINAL TEST	Test Report

The test groups and plant visits must be programmed once the Work Chronogram to be sent by CMEC is known. At least two visits during the Manufacturing process will be carried out. All the Inspection process in two or more round trips, must be programmed after knowing the Work-Time Charts: one for Frame tests (bogie and Body) and other for the final tests. Rail Grinding machine for a trip is added to perform the inspection of the construction of the grinder trolley.
SOFSE will send two representatives in order to presence these tests, Air Tickets, transfers, 5-star hotel accommodations and land mobility will be provided by CMEC.

1.13. SURVEILLANCE AND RECORDING SYSTEM

In both driving cabs, one by end, Video cameras will be installed, with enough sensitivity to operate from very low level lighting (by example: switching to infrared mode) to Full sun light.

In these extreme conditions the sensors will not saturate neither the signal noise ratio will decay, blurring the images.

These cameras generate an output in digital compressed format, which can be Black and White with low level lighting.

Besides, the cameras will take the environment sound. In both driving cabs, one by end, Video cameras will be installed, with enough sensitivity to operate from very low level lighting (by example: switching to infrared mode) to Full sun light.

In these extreme conditions the sensors will not saturate neither the signal noise ratio will decay, blurring the images.

These cameras generate an output in digital compressed format, which can be Black and White with low level lighting.

Besides, the cameras will take the environment sound.

- Sensor type: MOS
- CCD is finally agreed by all.
- TV Standard: NTSC
- Frames by second: 30 fps, programmable
- Sensitivity: 0.3 lx (Color), 0.05 lx (B/W) with automatic switching from Color to B&W
- Output: 10Base-T/100Base-T/1000Base-T network IPv4/IPv6, information compressed according to MPEG-4 or H.264
- TARGET: To take the record of the objects located in front of the cab, focusing at center of the track, this information recorded will be applied at the event of an accident or collision.
- You must have a simple and fast way of extracting the video. As the method through Navigator is very slow. Suggestions: FTP and / or USB 3.0 external disk

The output of the cameras will be recorded in two DVR (Digital Video Recorder) in multichannel format, located in both cockpit, will be sealable, and recording will be on an Hard Disk up to 96 hours of events. When the capacity of the disk is full, the recording overprints the oldest records, known as the FIFO "First In First Out" method. The recording media will be removable for Reading at the control station, using a PC under Windows Operating System (W7 or newer), using a DVR and an Internet NAVIGATOR. At least two cameras will be added for platform monitoring, registering the activity in both sides or over the platform, one oriented in one direction and the other in the opposite direction. If blind zones are detected an additional camera will be added. Sensor characteristics of these cameras will be similar to the head cameras, giving the same S/N ratio and sensitivity performances.

The output will be of the same type, digital and compressed. The Platform cameras will be connected to a 3rd. DVR of the same type.

Solid State Disks are preferable by their reliability.

All DVR of the head cameras will add a GPS, a Web Media Server and a WAN Access, in order to know the instantaneous position of the machine or watch the image taken by the cameras. This gives the possibility of access using Internet and the proper software.

The WAN data connection will range from Edge to 4G LTE systems. This system is similar to Vehicle Tracking systems used in Buses and Heavy Trucks.

Finally: The total number of Industrial DVR's is 3 (three) 1 for platform and 2 for heads sealable in order to prevent data manipulation after a collision. All industrial DVR will be connected to a local network 10/100/1000 Base-T type (Ethernet)

For the network, both 4G and 3G can be used. The station WIFI can be used.

GPS

The Principal will provide the technical specifications of the GPS.
For our part we require:

- Accuracy <10 meters (less than 10 meters).
- He sent packet every 6 seconds (programmable).
- Independent power. That is, you must have they own converter. Do not use the same converter for GPS, radios, cameras, etc.
- Virtec plot (the best known).

Example:
"Posición-> >RGP100215101251-3408841-05847823000180300FF0100;ID=123456;#4856;*Q2<"

- *RGP
- 100215101251: Date and time of the position: ddMMyyHHmmss format - UTC
- -3408841 Latitude (Ej : -34.08841°) - 8 characters
- -05847823 Length (Ej : -058.47823°) - 9 characters
- 000 Speed in KPH - 3 caracteres
- 180 Heading, Direction in degrees North (0.359)
- North = 0, East = 90, South = 180, West = 270 - 3 characters
- 3 Positions 3d
- 00 Age of data in hexadecimal (00..FF)
- FF0100 fixed value
- ID id = 123456 GPS equipment
- # 4856 package number
- *Q2 internal frame type identifier

Both GPS and communications equipment 3G / 4G, WiFi, etc should also have the EN 50155.

RADIOS

Independent power supply. That is, you must have their own converter. It may be the same as for the three radios will be used one at a time.

1 radio UHF for cab

- Frequency range: 450 ~ 520 MHz
- Possible models:
  - Kendwood TK-8360 (preferably)
  - Motorola PRO5100 LAM25RKD9AA2_N
- Programming kit for radio

1 radio VHF for cab

- Frequency range: 136 ~ 174 MHz
- Possible models:
  - Kendwood TK-7360 (preferably)
  - Motorola PRO5100 LAM25KKD9AA2_N
- Programming kit for radio

1 radio by Tetra for cab

- We provide us when the machines arrive. We will give a lead as to which model to assemble boards, wiring, etc.
- MTM5400 TETRA Mobile Terminal
- Transit Antenna with GPS TRNBG-7-27

Both GPS and communications equipment 3G / 4G, WiFi, etc should also have the EN 50155

EVENT RECORDER

The recorded event should send alert online

- In case of unavailability of data signal must store and forward the data to recover connectivity (delayed transmission, similar to the GPS work)
- Must store all offline events (both alerts, such as records of failures) for a period of 60 days.
- You must send the records considered "alerts"
- Format and method of Shipping: ** ** define
- Offline Registered
- They must have an interface to download software or data
- Failure to send by fatal data network, you must store and send alerts barely raises connectivity (send work similar to GPS)
- Brand HASLER TELOC 3000.

COMMUNICATION

The communication system, that will send / receive data to and from the processing center in Haedo should be flexible enough to bind by:

- Networks 3G and 4G mobile data
- With dual SIM and dual modem (one sim), transmitting simultaneously. This way we ensure that the data being sent by more than one supplier (each SIM) ensuring better coverage of 3G and 4G available networks.
- WiFi
  - Protocols 802.11b, g and n
  - In order to connect to WiFi networks when available nearby.
- For example, in a station.
  - Interlink Connectivity to the network (currently available in Line Sarmiento)

Frequency bands cell phone in Argentina:

- 2G: 850 / 1900
- 3G: 850 / 1900
- 4G: Banda 4 (AWS, 1700) / Banda 28 (APT700, 700 MHz*)
  - * There are other variants of 700 MHz that do not serve here as the band 17.

Both GPS and communications equipment 3G / 4G, WiFi, etc should also have the EN 50155

PC

Both the PC, such as monitors, etc. shall comply with the international standard **EN 50155** which establishes the characteristics of electronic equipment aboard trains.
The equipment should be in duplicate one another contingency in case of failure.
Some examples of brands and models for PC:

- http://www.systerra.de/PIP39.html
- http://www.moxa.com/product/V2426A.htm
- http://www2.advantech.com/products/d61fb9c6-aea9-4559-8c21-e42a768480ae/ARS-2510/mod_BBA48E6A-E96C-4E28-A6E6-2355FAAB1C37.aspx

1.14. SOFTWARE

The data analyzing software, emulators and other software will be operated in windows and the data output will be full readable for all machines.

This special software must be available for laptop, in order to process the acquired data. The number of copies will be at least 10 (ten) by Manufactured Machine.

The special software for the grinding machine must be available in PC version, in order to read and display the information and process it.

The software will store the acquired data in a database. The storage system will be redundant in order to avoid crashes with data losses.

The same software will be used to fix the malfunctions or deviations encountered; this fixed software will be transmitted to the machine components, in order to upgrade its performance.

The database will be exportable to Microsoft Office suite products (2010 version)

Maintenance soft will be accessed in the machine for maintenance "stops" programming.

For the network, both 4G and 3G can be used. The station WIFI can be used.

The formats and protocols for exchanging information between systems, will be agree during the software development process. We will use JSON as a data interchange format.

All factories refuse to satisfy the smart, intelligent, automatic, network operate and control requirements of the machines, and finally

CMEC coordinated a solution that could be achieved, which is as follows:

- The rail car and ballast regulator is to be positioned through GIS.
- The stabilizer is to be positioned through GIS, and can record the track position information that has been working on.

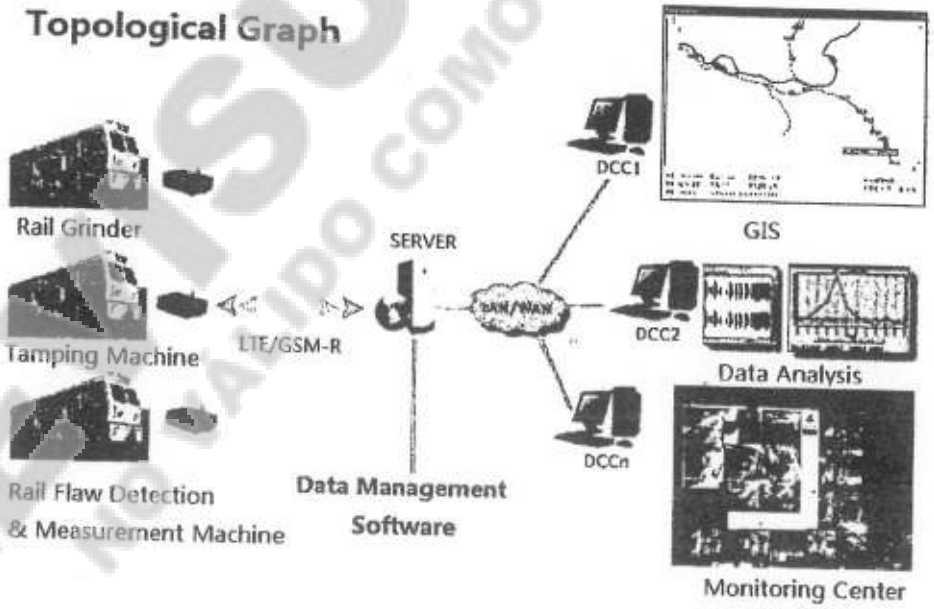

Function Introduction

- All the machine's GPS signal and monitor video information will be transmitted to the data center, so it could monitor the machine position and working situation within reasonable time delay.
- Rail flaw detection and measurement machine transmit the measurement data to the data center, and the data center will process this information. The staff of the Center makes due analysis and judgment according to his own experience, as well as the instructions for the operation and distributes the document to each working machine.
- The working machine will process the operation on the marked position, complying with the instructions from the Control Center (not the data center).
- The data gathered by the measurement machine cannot be directly used as working guidelines for other machines, but the report analyzed on those data can be sent to the tamping machine and grinding machine for reference.
- All machines will install and unified client software on an independent device and transmit and receive measurement data to data center.
- Above mentioned data transmission is performed via LTE or GSM-R.

The principal will provide hardware for processing Center

The Principal and CMEC, and all factories at last agree to the above proposed solution.

1.15. GAUGE

Rail flaw detection and measurement train, tamping machine, stabilizing machine y ballast regulator should be adjusted according to GVO 3234.

Track car: 4 Trucks cars gauge should be adjusted according to GVO 3234 y 1 Truck car gauge should be adjusted according to GVO 3236.

1.16. CNRT LIST

Other requirements

- Rail car operation alarm: beep
- Two extinguisher in cabin: 5KG ABC
- High voltage mark: 110V above
- Horns
- Main reservoir pressure test report:
- The minimum radius curve: For wide gauge 190 m. But for meter gauge of 130 m, TAIYUAN RAIL CAR.
- Bearing (SKF, TIMKEN, FAG)

- Insulation resistance of 0.01Ω
- Signal lamp and direction lamp automatic
- Brake air pressure interlocked with traction control
- Parking brake device
- Brake shoes clearance automatic adjuster with exception of Kunming Machines.
- All out of load gauge operation will disable the traction in travel speed condition.
- Warning system for the operation of railway rolling stock "MR-1-2013-E2"
- Factories must present a certificate which describes the machines are "asbestos free".
- Full list of spare parts with the corresponding code. and graphical reference.
- The manufacturer should install protection grids at the side air intakes and other systems that can be damaged by outside elements. Places to be protected by the grid will be determined by the Principal with the design drawings after the primary design.
- A cradle for protection against drop, must be installed under the drive shafts.

1.17. DELIVERY AND END OF MANUFACTURING TIMES

The due dates will take effect after the completion of the Design Meetings to be celebrated in Argentina.
Manufacturing time will be between 11 and 15 months (listed as follows) and time of delivery at the port of Buenos Aires will not be longer than 45 days.

Rail Grinding Machine: 15 months

Rail flaw detection and line measurement machine: 15 months

Tamping machine: 13 months

Stabilizer: 13 months

Ballast regulator: 11 months

Rail car: 11 months

Zhang Binbin CMTC
Hu Ronghui Bre
Xie Jiangsheng KCRC.
Yang Xuan, on behalf of Wang Xiaojian, Taiyuan

ANNEX 2

RAIL GRINDING TRAIN

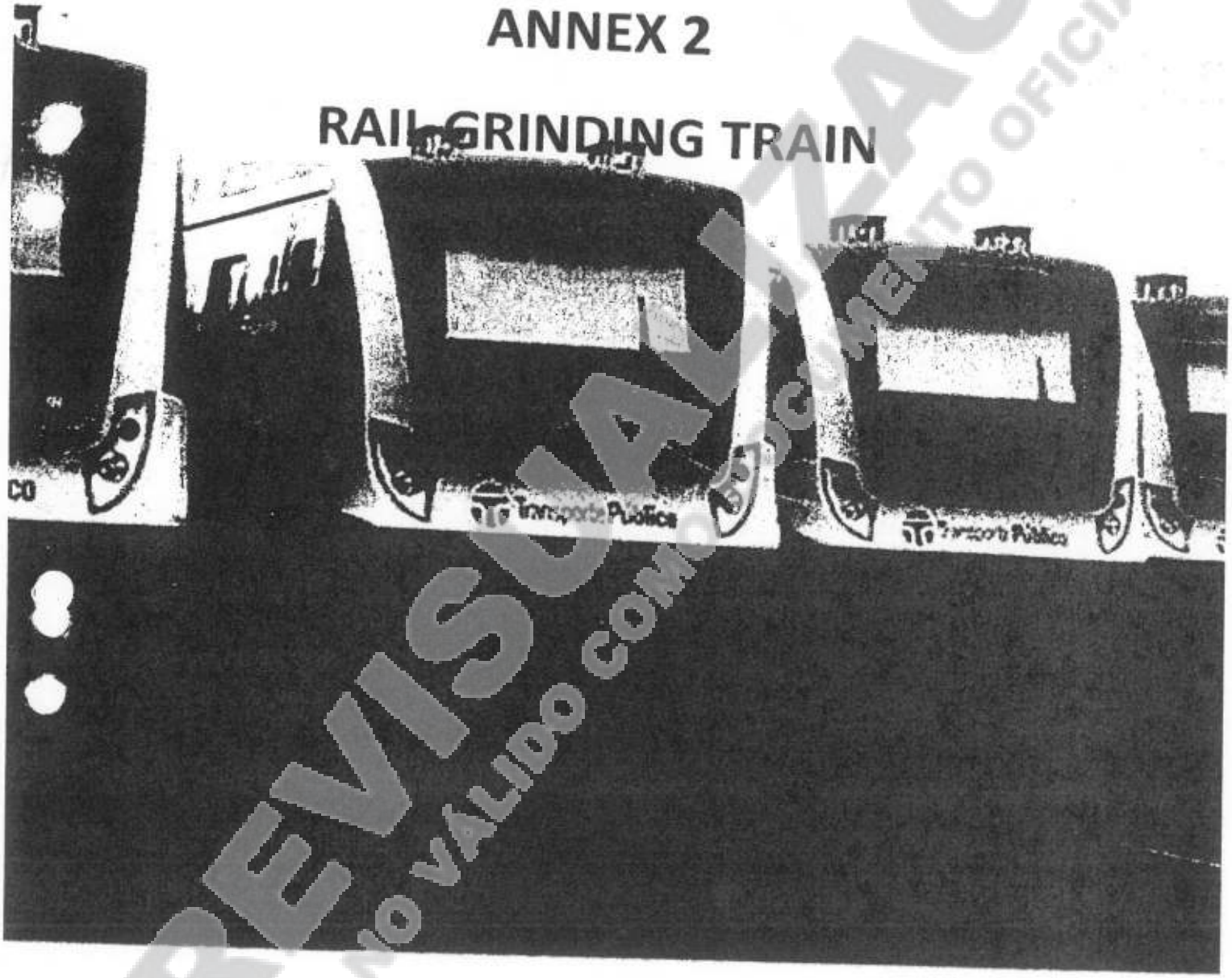

Hu Ronghui, Bre

ANNEX 2

1. RAIL GRINDERTECHNICAL SPECIFICATIONS

1. TECHNICAL DATA

- EngineCummins
- Power 2 x 373 kW
- Fuel tank capacity about 2 x 1600 L
- Generator:**Refer to Annex 1**
- Max. speed: 70 km/h
- Fire Water tank capacity 2 x 3000 L
- Working speed 3~16 km/h
- Service braking deceleration:**Refer to Annex 1**
- Emergency braking deceleration: **Refer to Annex 1**
- Min. radius 190 m
- Max. gradient 25 ‰
- Noise of driver's cab (any operation condition): ≤75 dB
- External noise (position where is 25m away from the grinding train and more than one meter from the surface of steel rail: ≤80 db.
- Towing hook of coupler lock system (According to UIC 520 standard) **Refer to Annex 1**
- Buffer (According to UIC 526-1 standard)**Refer to Annex 1**

2. TECHNICAL DESCRIPTION

2.1 The application condition

2.1.1 Working environment

- Max.environment temperature: -10℃～＋50℃ (without test report)
- Maximum altitude: 2000m
- Maximum humidity: 80%(with test report)

2.1.2 Line condition

- Clearance: In accordance with the clearance requirements of the Argentina broad gauge
- Gauge: 1676mm
- Rail cant: 1/40

- Maximum gradient: 25‰
- Axle load: 20t

2.2 Application and function

2.2.1Application

The GMC16A rail grinding train has the function of maintaining, repairing and grinding the rail, eliminates the defects of the rust and fatigue crack on the rail surface, corrugation, spots, fins and so on. The GMC16A rail grinding train has the following grinding function:

- The preventive grinding for new rails
- Periodic preventive grinding
- Corrective maintenance
- Turnout grinding
- Fixed grinding for the rail head
- Gauge anglegrinding

2.2.2 Main function

It can self-propel and has the function of two-way operation, simultaneous double-track grinding and bi-directional grinding back and forth.

It has good reliability, sophisticated security measures, and the necessary design redundancy.

It has the function of the testing for main parts, the fault diagnosis and warning, and can be transmitted to the data center via network.

It has the function of fault emergency treatment, and coupling traction with the diesel locomotive.

It has the perfect fire prevention and control facilities.

It has the memory function in the back and forth grinding.

It has the function of automatic measurement, record and data output for the track cross-section profile.

It has the function of automatic measurement, record and data output for the rail longitudinal wavy wear.

It has the function of spraying water, dust collection, filtering and the filter blowback.

It adopts computer control programmable grinding and automatic control.

2.3Technical parameters

2.3.1Basic parameters

- Boundary dimension(length× width× height) : 32600 mm×3000 mm×3800 mm
- Coupler: Refer Annex I
- Coupler center height : Refer Annex I
- Buffers: Refer Annex I
- Combining form: 2-section coupling
- Bogie axle arrangement: 2-B_0+B_0-2
- Maximum axle load : ≤20 t
- Fuel tankvolume: 2X1600 L
- Fire water tank volume: 2X3000 L
- Diesel engine power: 2X373 kW (CUMMINS)
- Continuous working hours: ≥6h

2.3.2travelling parameters

- Maximum self-propelling speed: 70 km/h
- Minimum continuous self-propelling speed: 3 km/h
- Maximum coupling running speed: 100 km/h
- Minimum curve radius negotiable: 190 m
- Maximum allowable gradient: 30 ‰

2.3.3 Operating parameters

- Numbers of grinding stones: 16
- Grinding stone driving mode: Motor drive
- Grinding angle scope: -70°～+15°
- Operating speed scope: 3 km/h～16 km/h
- Operating speed precision: ±0.5 km/h
- Minimum grinding curve radius: 150 m
- Maximum grinding gradient: 30 ‰

2.3.4Rail grinding quality

- One-way grinding depth: 0.02 mm ～ 0.2 mm
- Rail profile grinding accuracy: ≤±0.2 mm
- Rail surface lengthwise flatness: ≤0.02 mm/ 300 mm; ≤0.2 mm/ 1000 mm
- The rail surface roughness (Ra): ≤10 μm
- No scorching defection on the rail surface

2.4 Technical Scheme

2.4.1General Arrangement

The grinding train is composed of two cars--- A1 and A2, which is basically a central symmetric structure and composed totally same. GMC16A type rail grinding train is composed of car body steel structure, running gear, diesel engine system, cooling system, hydraulic transmission system, rail grinding system, dust-precipitating system, air system, electric system, fire extinguishing system, measuring system, etc.

Introductions of all systems mentioned in the following are set A1 as an example.

From the coupler end to the link rod end, the upper part of A1 is divided into the driver's cab, water tank, dust collecting device, pneumatic device, fuel tank, power room (alternator, cardan shaft, transfer case, diesel engine, etc.) and the cooling room.

From the front to the back, the lower part of A1 is divided successively into the follower bogie, the grinding car, the inspection car, the power bogie.

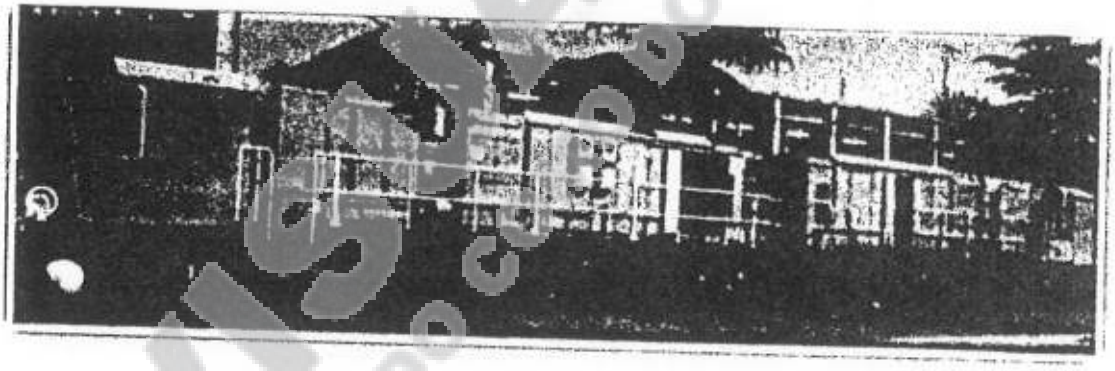

Figure 1 GMC16A Rail Grinding train external view

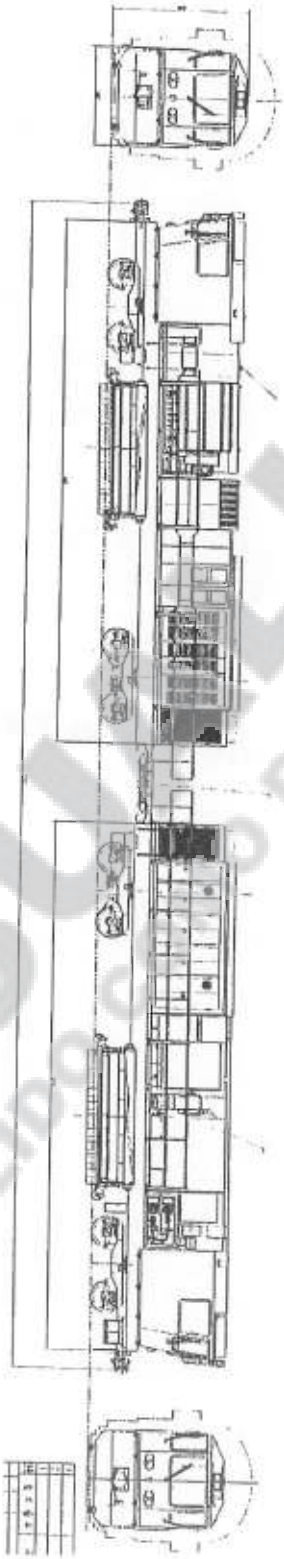

2.5 System composition

The car body of GMC16A rail grinding train includes the coupler, the frame, the driver's cab, the grab bar, the staircases, the power room wall, the connecting rod device between A1 and A2 trolley, etc.

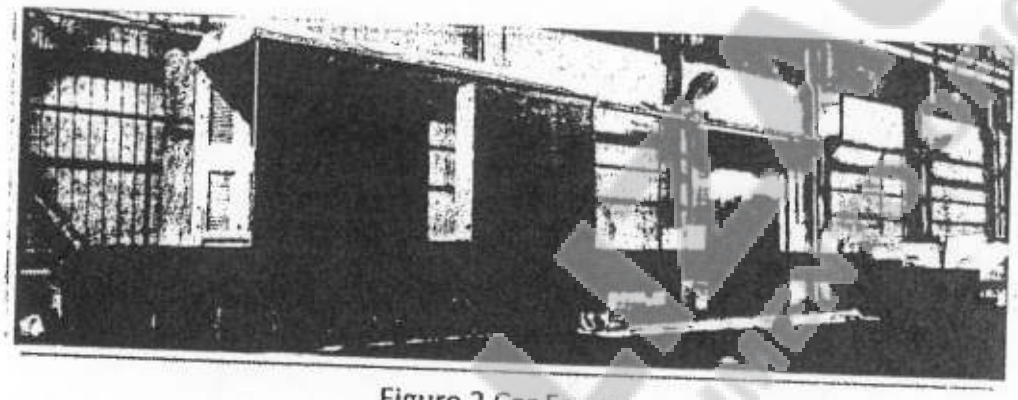

Figure 2 Car Frame

The axle arrangement of GMC16A rail grinding train is 2-Bo+Bo-2， and the bogie comprises the power bogie and the follower bogie.

Figure 3 Power bogie

The diesel engine system which consists of the diesel engine and its accessory system (including the fuel system, the air intake and exhaust system, and the sewage system) is the power system of GMC16A rail grinding train.

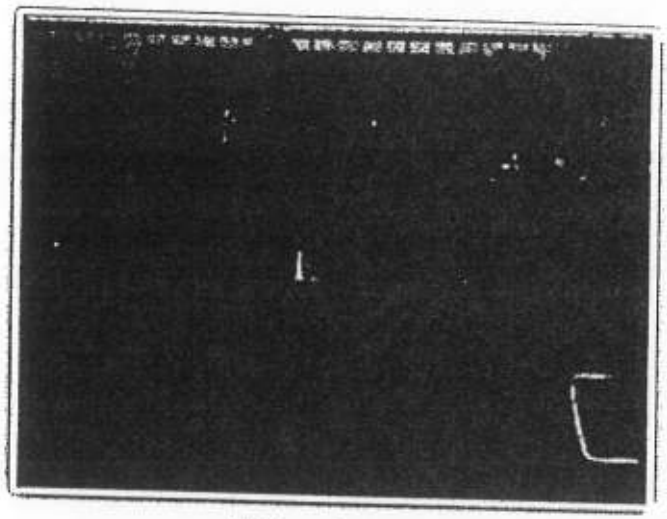

(a)Diesel engine

(b) Fuel Tank

Figure 4 Diesel engine system

The cooling system of GMC16A rail grinding train has a separate cooling room to cool down the air and water of diesel engine and hydraulic oil in the hydraulic system.

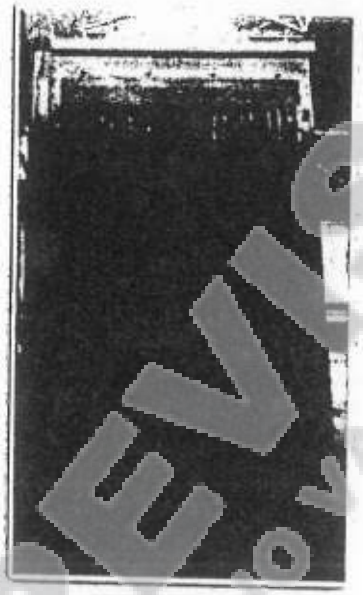

(a) Profile

(b) Interior

Figure 5 Cooling equipment

The transmission system of GMC16A rail grinding train adopts fully hydraulic transmission which consists of the hydraulic pump, the motor, the group valve and the pipeline, etc.

The grinding trolley which is the core part of the GMC16A grinding train consists of the steel framework, the grinding operation device (grinding stones), the running and traction device, the hydraulic system and the pneumatic system in operation, etc.

The dust collection device of GMC16A rail grinding train which is used for adsorbing the grinding dust consists of the metal air-intake pipes, filters, the blowback control device, the fan, the drive motor, and the exhaust muffler, etc.

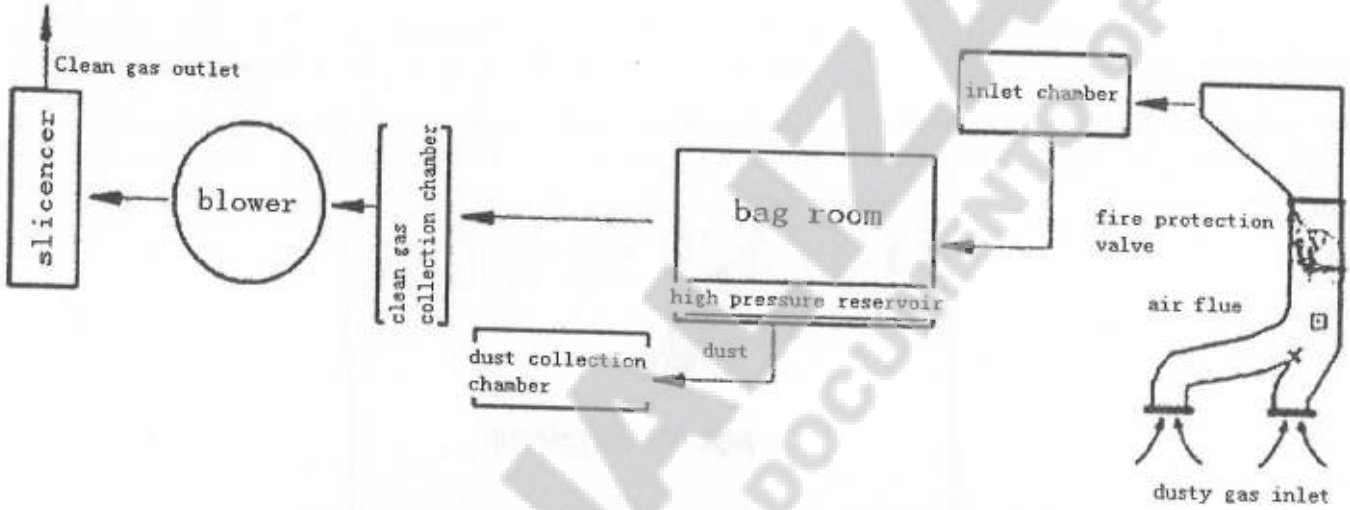

(a) Working principle

(b) External view

Figure 6 Dust collecting device

The air system of GMC16A rail grinding train includes the air source device, the braking system, the pneumatic system in operation, and the auxiliary air system.

The electrical system of GMC16A rail grinding train includes the power supply system, the running control system, the operation control system, the lighting system, and the video monitoring system, etc.

The fire protection system of GMC16A rail grinding train comprises the fire water system, the self-extinguishing equipment, and the fire extinguishers and so on.

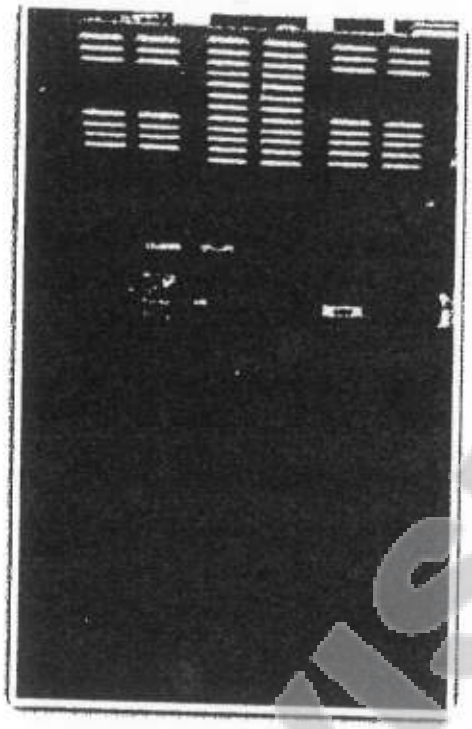

Figure 7 Air source devices

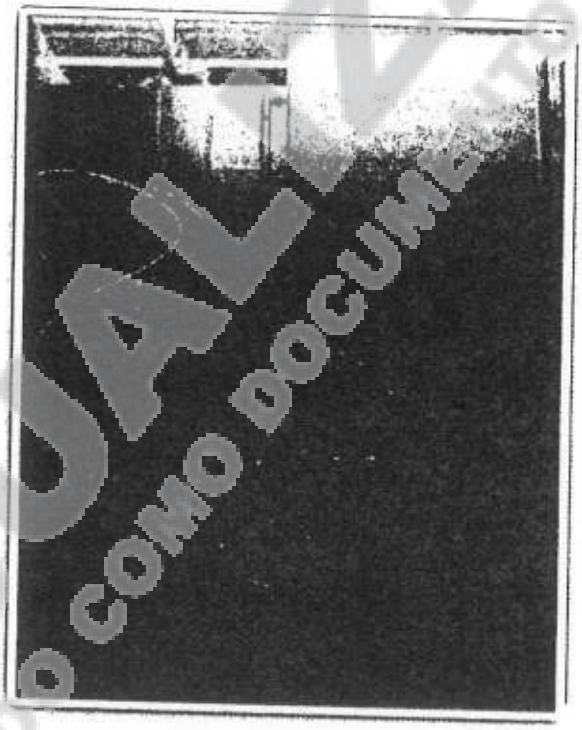

Figure 8 Water tank

2.6 The Configuration description

Serial	Name	Type	Manufacturer
1	Car body	EQY -70	BRE
2	Bogie	EQZ -00	BRE
3	Diesel engine	QSX15	Cummins

4	Subsidiary system of diesel engine	EQY -10	BRE
5	Cooling device	LQZZ-GMC16A	BRE /201Institute/Dalian Institute
6	Hydraulic pump		Rexroth
7	Grinding trolley	GSC	BRE (Industrial Company)
8	dust collect plant	JCZZ-GMC16A	BRE /201Institute
9	Air source device	AGTU-1.6	Jiaxiang in Shijiazhuang City/ BRE(Hongfeng)
10	Generator	-	Refer to Annex I
11	Running control system	DF	BRE (electrical company)
12	Operation control system	DF	BRE (electrical company)
13	Fire extinguishing system	EQY -90	BRE

Note:

I. Both sides agree to make an inspection during the construction of the grinding trolley, in charge of CMEC

II. Cooling room protection grating form to be provided by Principal, BRE adopts.

2. LIST OF FREE OF CHARGE ATTENDANT TOOLS FOR THE RAIL GRINDING TRAIN

The following list ispreliminary, for reference only, and the final list will be determined after final design is confirmed by the Principal.

No.	Name	Quantity
1	Drainplug	100
2	Fittertoolkit	2
3	Electriciantoolki	2
4	Oilgun	1

The Principal require all special tools for maintenance,routine and light maintenance of all equipment systems, while BRE can only provide tools for routine and light maintenance.

3. SPARE PARTS FOR TWO YEAR OPERATION OF THE RAIL GRINDING TRAIN

The Price of the Spare Parts for two years operation of the rail grindingmachinewouldbeincluded in the Price Breakdown. Detailed list will be submitted at the presentation of the final Design of the rail grinding machine.

The value of parts and supplies must not exceed 6% of the overall value of the equipment, which may be used interchangeably.

CMEC must ensure that spare parts and supplies of equipment are in the market for a period of 15 years.

4. TECHNICAL DOCUMENTS FOR THE RAIL GRINDING TRAIN

Technical documents delivered along with each set of machinery to the Principal are listed below. The following list of technical documents is preliminary while the final one will be confirmed during the design meeting.

Technical Documentation: All documentation submitted by CMEC will be Castilian in digital and paper. 5 copies printed per vehicle.

The technical documents delivered with the rail grinding machine includes:

No.	Name
1	Rail grinding machine, assembly drawing of car A1 and A2
2	Main system, components assembly drawing
3	Hydraulicsystemschematicdiagram
4	Air systemschematicdiagram
5	Electric systemschematicdiagram
6	Equipmentassemblingtechnicalcondition
7	Equipmentdebugging, testingoutline
8	Rail grinding machine user's manual 1st part
9	Rail grinding machine user's manual 2nd part
10	Rail grinding machine user's manual 3rd part
11	Rail grinding machine user's manual 4th part

12	Rail grinding machine's grinding control system maintenance guidebook
13	Rail grinding machine's traveling control system maintenance guidebook

Note: After signing the contract, the Factory will provided physical geometry, rugosity of the grindstones and sample.

5. TECHNICAL SERVICE PROGRAM FOR THE RAIL GRINDING TRAIN

The following plan is a preliminary technical service program for the Rail grinding train while the final one will be confirmed during the technical meeting.

The warranty period of the equipment is two (2) years, which shall take effect at the end of commissioning in Argentina.

5.1 CMEC will send technicians to the Principal's premise to supervise and guide the unloading, installation, commissioning, and acceptance of large-scale maintenance machinery, as well as to provide on-site technical service.

5.2 Services

- Staticvehicleconditionchecking
- Guiding users to replace various oil
- On-site static and dynamic commission
- Running and working test
- Training in the basic principle, operation, safety and maintenance of the equipment
- Troubleshooting
- Car-followingworking

5.3 Within the guarantee period after delivering the maintenance machines, CMEC is in charge of sending technicians who meet the job requirements to provide after-sale services in Argentina. Service plan will be adjusted according to the actual working and using situation of different machines.

5.4 CMEC engineers will be responsible of technical training for end-user's local concerned people. For details, please refer to the technical training program.

6. TECHNICAL TRAINING PROGRAM FOR THE RAIL GRINDING TRAIN

6.1 TRAINING OBJECTIVES

Helping the trainees to understand the principles, maintenance methods and some notes of each kind of large-scale maintenance machinery under the contract, letting the trainees get skilled at operating the equipment and preliminarily having emergency handling capability.

6.2 TRAINING MATERIAL AND DOCUMENTS

User's manual and maintenance.

6.3 TRAINEE REQUIREMENT

Good health physique quality is required. In particular, college degree or above, preliminary or above technical title, and over 1-year related working experience are also required for the trainees.

6.4 TRAINING PLAN

The following training plan is a preliminary plan while the final one will be confirmed after signing the main contract. CMEC will provide a preliminary training plan 15 days after signing this minute.

No.	Equipment	Training time
1	Rail grinding machine	Factory theory and hands-on training: 4 weeks/4 people; On-site hands-on training: 6 weeks/10 people.

The costs for personnel designated by the SOF SE (passages, mobility, 5-star hotel accommodation, transfers, etc.) for training in China should be in charge of CMEC.

For training in China and Argentina CMEC will be in charge to include a translator for each course.

All training materials will be delivered in Castilian.

During training in China CMEC should schedule visits to the railways where equipments are being used.

CMEC will be responsible for all personal expenses (transportation, mobility, housing, etc.) during the training in Argentina.

PARTS II, III and IV are only for the Principal reference and information, which would be upgraded according to the tracks conditions of Argentina and Principal´s requirement listed in Annex I.The RAIL GRINDING must have at least the characteristics described in the following PARTS II, III and IV.

PART II INTRODUCTION TO THE GRINDING TROLLEY FOR ARGENTINA

1. THE RAIL GRINDING PURPOSE

The rail grinding is to eliminate the rail surface irregularities, the surface defects and to restore the rail head profile back to the original design requirements mainly by the grinding machine, thus to slow down the progress of the rail surface defects and improve the rail surface smoothness, and to further improve the ride comfort, reduce the wheel-rail noise, and prolong the service life of the rail.

2. THE GRINDING TROLLEY FUNCTION

2.1 maintenance grinding: To have periodical maintenance for the rail surface wear, such as corrugation abrasion, shortwave abrasion, long wave wear and damaged welded joint.

2.2 repair grinding: to repair the rail surface defects, such asfins, the irregularity of running surface, spots and sand holes, the surface wear and deformation etc.

2.3 The grinding system is motor-driven, and the grinding wheel can be replaced in the no-ditch environment.。

2.4 The grinding angle, power and lateral deviation of the grinding unit can be controlled.

2.5 Each grinding operation can work continuously no less than 6 hours.

2.6 The grinding trolley has the function of manual emergency lifting under the condition of the entire control system invalidation.

2.7 The grinding trolley can be lifted urgently in mechanical way under the condition of the failures of the control system and the hydraulic system.

3. THE GRINDING TROLLEY OVERVIEW

The grinding trolley consists of the steel structure, the hydraulic system, the pneumatic system, and the electrical system. The traction rod which will guide the grinding trolley running on the rail is

installed on the top of the frame of the grinding trolley. The grinding trolley is lifted and descended by four hydraulic cylinders. The grinding trolley is landed on the rail by the hydraulic cylinders when it is working; after work it is lifted to the highest position by the hydraulic cylinders, and the locking device starts to work. The locking strip inserts into the locking bed on the vehicle frame, and the grinding trolley is hung on the vehicle frame.

The movement of the grinding trolley is completed by the electrical system, the hydraulic system and the pneumatic system together. In order to ensure the normal running of the system, we must have daily inspection, maintenance and repair for the structure and the system in daily work.

The maintenance manual is applicable to the grinding trolley of the GMC16A rail grinding train.

Theoperatingspecifications:

- The grinding trolley is applicable to the rail of 50kg/m, 60kg/m, 75kg/m, and the turnout of 9#,12#,18#,30#,38#.
- The grinding trolley is suitable for the mainline and turnout grinding, and the turnout grinding is only used on the fixed simple turnout of the straight rail.
- The operative norm of the grinding is TB/T2658.22-2010 *"Part 22 of the operation ----the grinding train operation of the rail and turnout"*

4. THE TECHINCAL PARAMETERS

4.1 environment temperature: -20°C～+50°C

4.2 Gauge: 1676mm

4.3 Max. superelevation: 180mm

4.4 the quantity of the grinding unit:

2 grinding units of orbifold(including two 15kw motors) + 2 grinding units of rail surfaceincluding two 18.5kw motors)

4.5 The grinding motor

4.5.1 speed: 3600rpm (440V, 60Hz);

4.5.2 rated efficiency: ≥93%;

4.5.3 power factor: 0.84;

4.5.4 insulationgrade: H;

4.5.5 level of protection: IP55;

4.5.6 The motor of the grinding stone should be fully protected so as to meet the requirements of high temperature, high humidity, splashing water, high dust, high density of iron powder and other harsh environment.

4.6 the angle of the grinding stone

4.6.1 The angular range of the grinding stone for the rail surface: -20°~+15° (The angle is negative for the inclination to the inside of the rail center, and positive for the inclination to the outside of the rail center.)

4.6.2 The angular range of the grinding stone for the orbifold:

0°~-70°

4.7 The grinding wheel

4.7.1 The grinding wheel size for the orbifold: Φ260mmX27/35mm;

4.7.2 The grinding wheel size for the rail surface: Φ180mmX105mm;

4.7.3 The average working life: the continuous working life is not less than 4hrs for the grinding wheel of Φ260mm, and 8hrs for the grinding wheel of Φ180mm;

4.8 The grinding operation speed: 3km/h~16km/h, the turnout grinding speed: 3km/h;

4.9 The grinding accuracy:

4.9.1 Longitudinal smoothness: 0.03 (wavelength range: 30mm~300mm)

4.9.2 Horizontal outline:±0.2mm

4.9.3 Surface roughness: Ra10μm

4.10 The working pressure of the pneumatic system: 7.5bar

4.11 The working pressure of the hydraulic system: 165bar

5. THE STRUCTURE SPECIFICATION

The connection between the grinding trolley and the car body: the upper lifting lug of the four lifting hydraulic cylinders in front and back of the grinding trolley are connected with the frame body of the

vehicle by a pin shaft, and the upper seat of the traction rod which will guide the train running properly is connected with the frame body by the bolt-on connection.

5.1 The jacking system

The lifting gear is composed of the hydraulic cylinders, the speed regulating valve, the connecting base, and the pin, etc, which is the executive component to drive the grinding trolley to go up and down. The grinding trolley is landed on the rail by the hydraulic cylinders when it is working; after work it is lifted by the hydraulic cylinders.

5.2 The traction device is composed of the traction rod and the traction mounting bases at two ends which are installed between the frame of the grinding train and the framework top surface of the grinding trolley. The grinding trolley can have two-way running on the rail through the traction rod.

5.3 The grinding trolley consists of the frame body, the locking device and four groups of tilting grinding units (two sets of ordinary grinding units and two sets of special grinding units), etc.

5.4 The frame body

The frame body mainly includes the frame, the end plate, the dust cover, the cover plate, the travelling wheel assembly, the translation mechanism, the end face fire curtain, the limit slot etc. The frame body which bears the dead-weight and the load of the grinding operation can not only meet the requirement of strength, and also meet stiffness requirement to guarantee the needs of grinding operation..

5.4.1The whole frame is the"田"structure and the wholistic processing.

5.4.2 The cover plate

The cover plate is located in the upper car body of the grinding trolley to make the car body interior form an airtight space in favor of the operation of the dust collection device, and connected with the dust collection device through the flange and corrugated tube.

5.4.3the dust cover

The dust cover is made of the stainless steel, and can effectively reduce the deposition and cementation of the scrap iron. The dust cover and the car body stick tightly to form a sealed space and better play to the role of the dust collection device.

5.4.4 The limit slot

When the trolley is lifted, the guiding role of the limit slot can guarantee the accurate lock of the locking device and the locking bed. The limit slot has the lateral limit function in locking state.

5.4.5The locking device

The locking device consists of the cylinder, the flashboard, the position travel switch, etc. When the grinding trolley needs to be locked, the flashboard inserts into the locking bed on the frame of the grinding train; when the grinding trolley needs to be unlocked, the flashboard will get back.

5.5The grinding unit

The grinding unit can rotate by fixing two ends on the spindle of the frame. When the setting angle is reached, the angular displacement sensor will give the signals, and the inclined hydraulic cylinder will be locked by the hydraulic lock, and the cradle basket will be locked in this Angle to grind the rail.

The deflection angle of the grinding unit for the orbifold is 0 ° ~ -70 °, which can be realized by the tilting cylinder module. The deflection angle of the grinding unit for the rail surface is + 15 ° ~- 20 °, which can be realized by the tilting cylinder module.

5.5.1 The ordinary grinding unit

There are two sets of ordinary grinding units for the grinding trolley. Each ordinary grinding unit consists of a cradle basket, two sets of grinding stones, a set of clamping cylinder, two sets of pressurized cylinders, two groups of inclined oil cylinders, two sets of limit wheels. In grinding operations, the lifting and pressurizing of the grinding stone can be realized through the parallelogram movable mechanism and the pressurized cylinder device together. Each grinding stone can go up and down by the lifting gear to adjust the pressure on the rail head surface from each grinding wheel.

The grinding stone, which is the key component of the grinding trolley, consists of the grinding motor, the clamping device, the three-petal chuck, and the grinding wheel.

5.5.2 The special grinding unit

There are two sets of special grinding units for the grinding trolley. Each special grinding unit consists of a cradle basket, two sets of grinding stones, two sets of clamping cylinders, two sets of pressurized cylinders, two groups of inclined oil cylinders. The grinding stone consists of the grinding motor, the grinding wheel, and the grinding wheel clamping device. In grinding operations, the pressurized cylinder controls the lifting and pressurizing of every grinding stone, and the deflection angle of the grinding unit is controlled by the tilting oil cylinder.

The grinding stone consists of the grinding motor, the clamping device, the three-petal chuck, and the grinding wheel.

5.5.3The protective cover

A protective cover is installed under the grinding stone motor for the ordinary grinding unit to prevent grinding wheel flying out in abnormal situation.

5.6The translation mechanism

The lateral translation mechanism of the cradle basket of the grinding trolley is composed of the upper and lower seats, the spring plate, the snapping wheel, and the oil cylinder and so on, and the mainline grinding and the turnout grinding can be realized through the oil cylinder control.

PART Ⅲ TECHNICAL PROPOSAL OF GMC16A RAIL GRINDING TRAIN CONTROL SYSTEM

1. SYSTEM FUNCTION DESIGN AND HARDWARE SELECTION

1.1 The network function of system and hardware selection of computer system

According to the function, bus system is divided into train bus and vehicle bus.Train bus adopts industrial Ethernet, its main function is to realize the data transmission between host and each extension and touch screen.Vehicle bus mainly control equipment used in this section of vehicle, to select the type of bus depending oncommunication interface of the device.

Hardware of control system adopts the Calais industrial automation products.The product has the following advantaged characteristic: wide range of hardware system scale, safe and reliable, easy installation and replacement;Bus is versatile, reliable redundant systems;General purpose programming language;Practical library routines and functions;The application precedent of railway industry; Software and hardware seamless embedded of wireless network transmission;

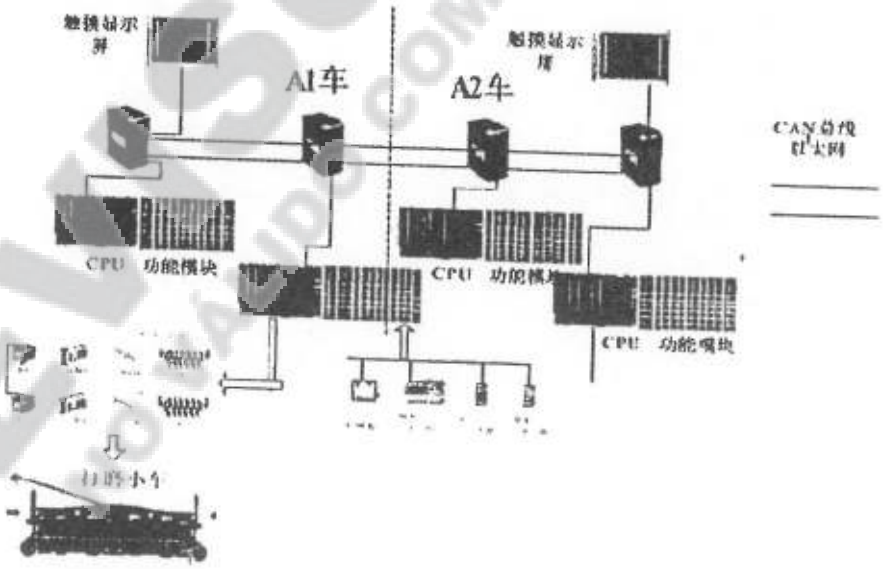

Network architecture diagrams of train level

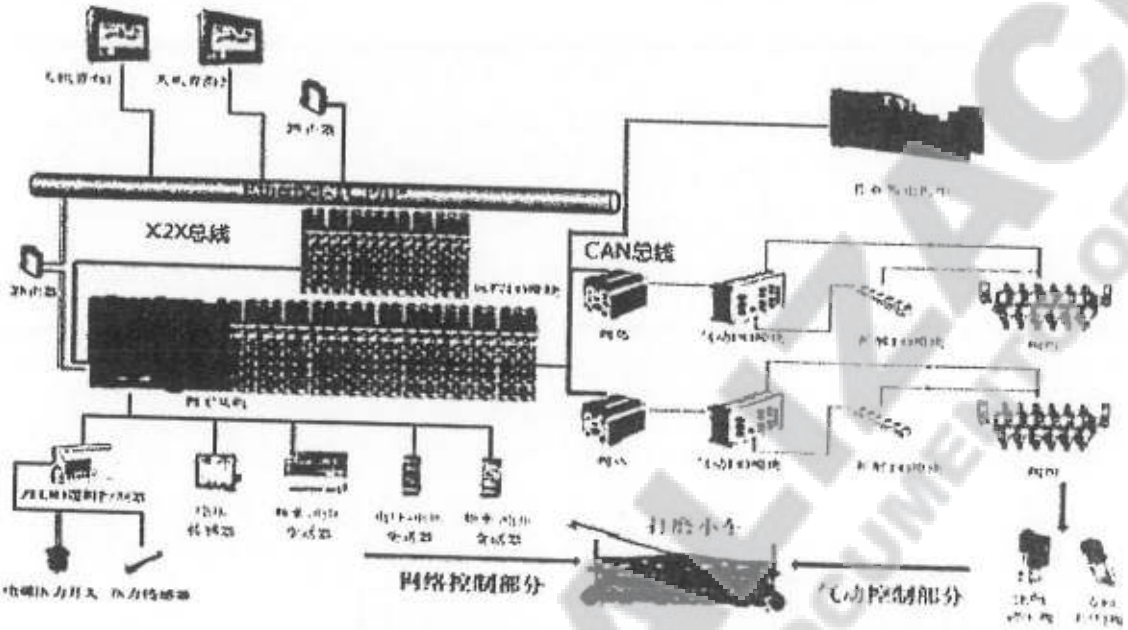

Vehicle level network architecture diagram

1.2 Grinding pressure control and pneumatic components selection

Grinding pressure control is through the adjustment of pneumatic system control the grinding pressure, which is to realize power adjustment of grinding motor, finally realizesquantity control of the grinding.The reliability and precision of pneumatic component directly affects grinding effect.Hardware adopt Germany festo (festo) products, some of the outsourcing parts are also entrusted to be processed by festo.

1.3 Logic control and hardware selection of power supply and distribution system

The contactor, circuit breaker, mini circuit breakers of the power supply and distribution products used in control system adoptthe brands like ABB, Siemens, and so on

2. INTRODUCTION OF SOFTWARE FUNCTION AND TECHNICAL CHARACTERISTICS

Mainly includes: multiple bus applications.Grinding quantity control - grinding power control;Rail profile correction - grinding head angle deflection;Logic control functions; Protection alarm and fault diagnosis system;

1).Grinding angle control - rail profile modification

2).Protection system

Fault record can through the EXCELL form through wireless network transmission to the user data center.

The initial interface

The lock screen interface

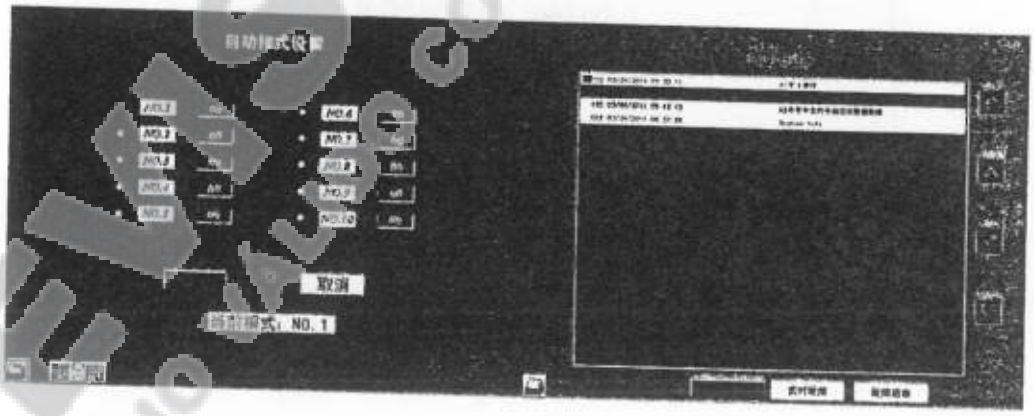

Automatic grinding set interface

Fault recording interface

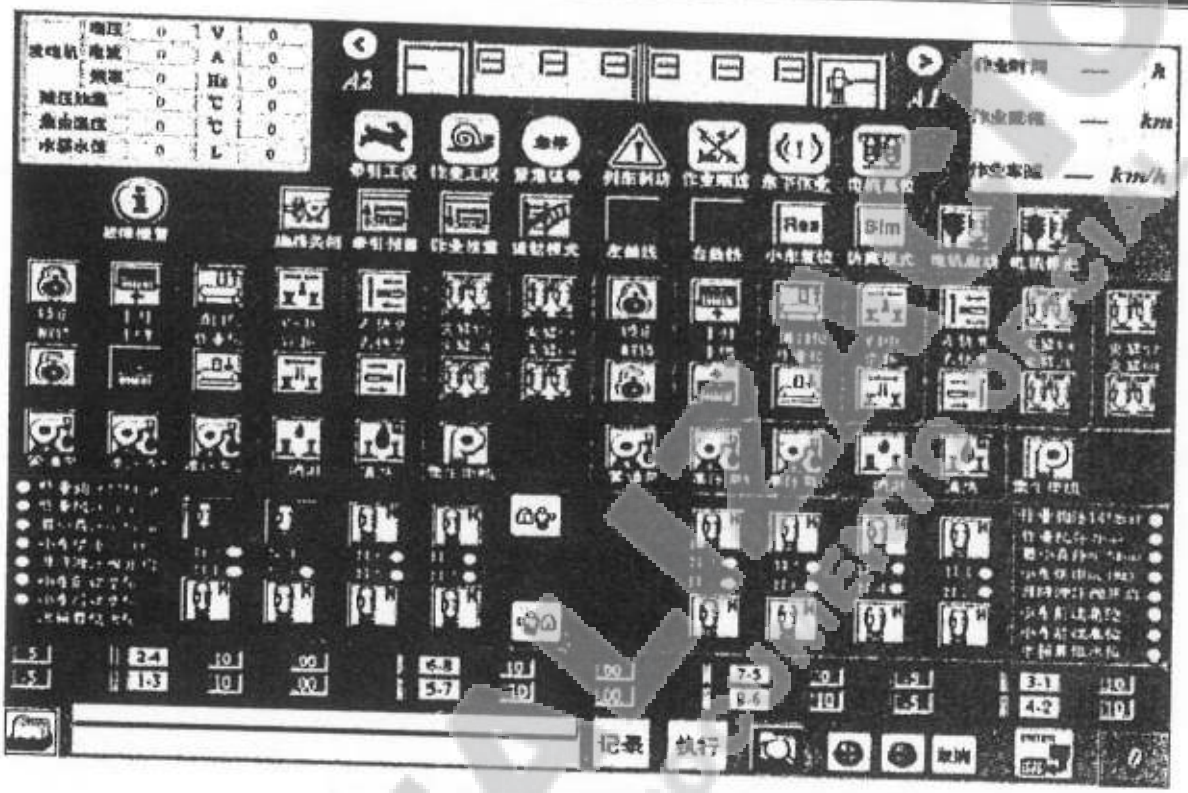

The main operation interface

3. INTRODUCTION FO TRACTION CONTROAL SYSTEM

3.1 Overall

The main function of train operation control system is to control the train driving section, supply the low constant speed for grinding and high speed running. Secondly, heat dissipation control, fault unloading and train operation parameter collection. System adopts the idea of modular design and the high reliability and programmable logic controller (PLC) as the hardware structure, adopting the Calais industrial automatic products.

3.2 Low-speed driving control

Train is in grinding operation, according to the requirements of users; speed need stability to 0 to 16 km/h, velocity error is less than 0.5 km/h. According to the requirement of the hydraulic driving system, control system achieves low constant speed control by closed-loop regulating pump and motor.

3.3 High-speed driving controls:

When it is in operation at low speed and high speed driving, we adopt the same 16 shift driver controller to realize driving control. When it is at low speed, 0 to 16 shifts is corresponding to the speed of 0 to 16 km/h, when it is in high-speed, 0 to 16 shift is corresponding to the speed from zero to the maximum.

3.4 Heat dissipation control:

According to the requirements of the cooling system, control the rotate speed of heat dissipation.

3.5 Control transformation of the cab

The cab is located in both sides of the train. It only one end can master control at any time, operation signal of the other end is invalid.

3.6 Protection and alarm:

Train operation control system protection is divided into two categories, unload class and alarm class after the failure of unloading, itis confirmed by the driver to be converted into alarm class.

3.7 Information record of locomotive:

Real-time record status parameters in the driving process of the train and the operation information of the driver, which is convenient for failure analysis.

PART IV PROPOSAL OF BOGIE

1 STRUCTURE INTRODUCTION

2bogies mounted are on each car， one power bogie and one unpowered bogie. unpowered bogie consists of frame, wheel set axle box, side bearing, traction device, basic brake device(incl. parking brake unit), accessories etc.， power bogie includes axle gearbox, as seen in fig1.

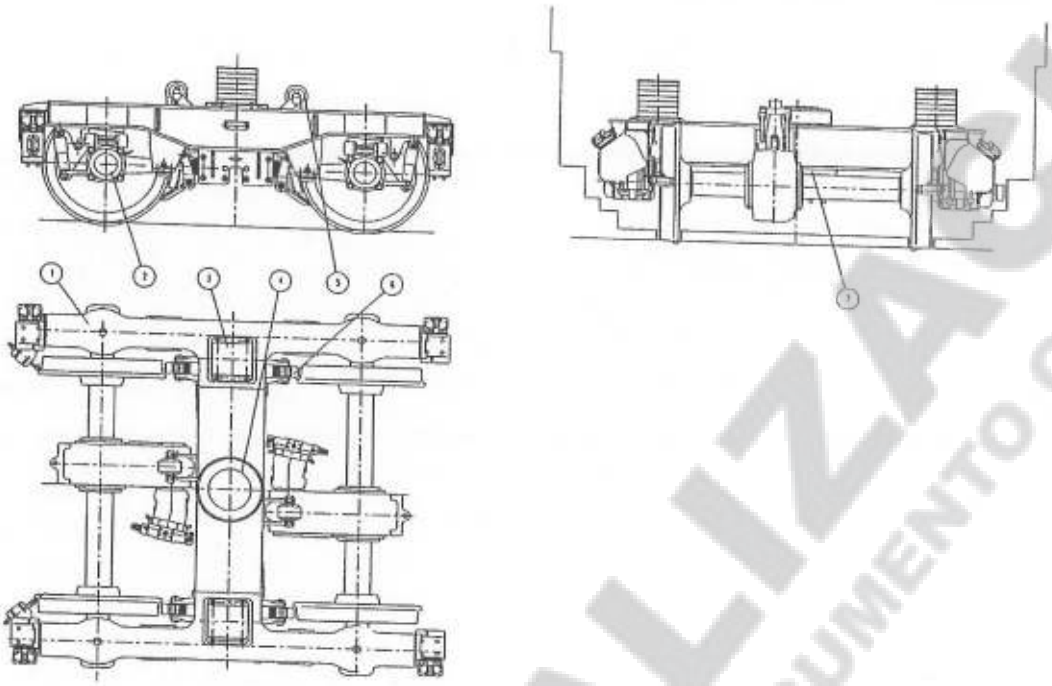

1-frame; 2-wheelset axle box; 3-side bearing; 4-traction device; 5-gearbox&erecting by overhang; 6-basic brake device; 7-accessessory。

Fig1 Bogie Structure

2 MAIN TECHINICAL PARAMETERS

- Max. Speed（km/h） 70
- Min. negotiable curve radius（m） 190
- Axle arrangement 2-B0
- Axle load（t） 16
- Track gauge（mm） 1676
- Wheel base（mm） 1800
- Wheel diameter(new/worn)(mm) 840/770
- Natural bow（mm） single stage coil sping+rubber metal pad 59+2
- two rubber metal pad 13
- single stage vertical oil damper resistance coefficient（kN.s/m） 32

3 NORMATOVE REFERENCES

- UIC615-4 power car-bogie and running gear-bogie frame structural strength test
- TB/T2945 railway rolling stock LZ50 steel axle and billet technical specifications

- TB/T2817 railway rolling stock solid wheel technical specifications
- TB/T 1463 locomotive wheelset assembly technical specifications

4 STRUCTURE INTRODUCTIONS

Frame adopts H type overall welding structure, consists of 2 side beams and 1 sleeper beam. Side beams and sleeper beam are both assembly welding box structure, which integrates other parts of bogie and bears dynamic and static loads of car body、transmit traction force、brakeforce、lateral wheel track force. There are 4 tumbler seats on the side beam、4 axle box spring elliptic cylinders、4oil damper fitting seats、2 side bearing seats、2 brake unit fitting seats. Sleeper beam center is welded with center pin seat.

Wheel set axle box adopts solid tumbler type axle box body, one end is connected with tumbler seat by rubber joint, the other end is connected with frame fitting seat by vertical oil damper. Axle box spring is single set rewinding coil spring mounted on the top. Axle box is designed with a device with the function of whole hoisting and spring vertical backstop; solid rolled wheels diameter is 840mm. dynamic bogie axle is equipped with axle gearbox as dynamic as power wheel drive.

Side bearing transmits vertical forces and equalize axle loads, making bogie turn around to car body through curves. Considering service condition, this locomotive adopts soft single stage suspension and hard secondary suspension, bogie is designed with two rubber metal pads.

Traction device adopts center pin traction, to transmit tractive force、brakeforce,to make the bogie turn and traverse to the car body; Nonbearing the upper part body weight.

Basic brake device adopts single side tread brake unit, with the function of clearance and elevation automatic adjustment. Each bogie is mounted 4 sets tread brake units; 2 sets of them are parking brake unit, applicable to the slope of 30‰, diagonal arrangement, and hand release function.

Bogie accessory devices mainly include axle gearbox safe support and bogie plate assembly etc.

5 BOGIE DESIGN

1）bogie frame is professionally designed, static strength and fatigue strength calculation are according to UIC615，UT test made for important parts.

2）axle design、manufacture and test are in line with TB/T2945；wheels design、manufacture and test are in line with TB/T2817； magnitude of interference of wheel and axle is in line with TB/T 1463，ensure safe reliability and the torsion transmit of wheels and axle.

ANNEX 3

TAMPING MACHINE, TRACK STABALIZER REGULATOR

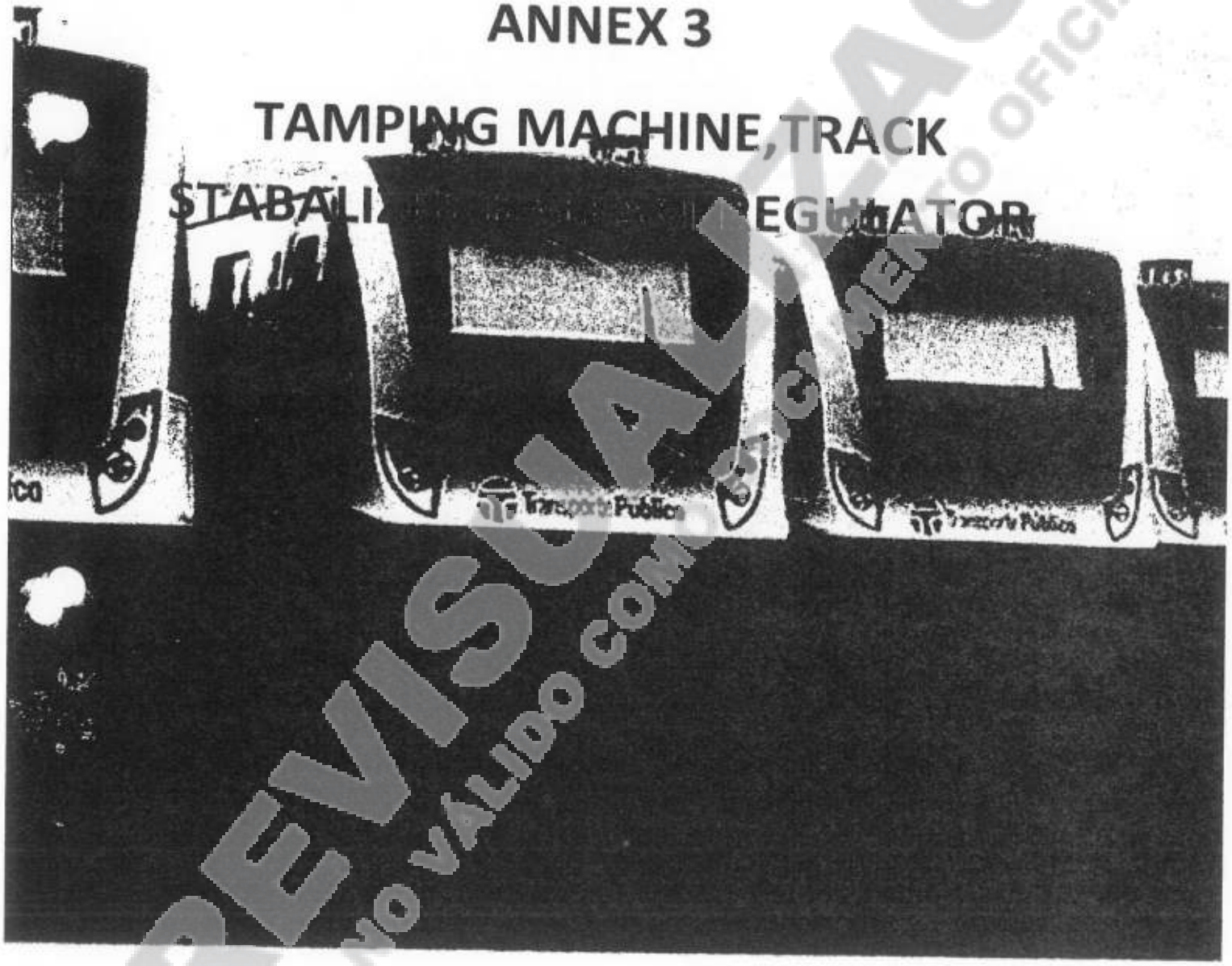

Xie Jiangsheng

Index

ANNEX 3

1. EQUIPMENT TECHNICAL SPECIFICATIONS

1.1. TRACK DYNAMIC STABILIZER

Technical data

- EngineDeutz
- Rated power 350KW
- Overall dimensions of the vehicle are to be confirmed after final design, to meet the clearance requirements of Argentina.
- Gauge 1676 mm
- Axle load ≤20 t
- Max. working speed: 2.5km/h
- Vibrating frequency: 0 ~ 45 Hz
- Max. vertical load: 0 ~ 24 tn
- Min. working efficiency: 200m/h

Product features

- Max. traveling speed: 80km/h
- Traveling brake: Refer to Annex 1
- Emergency brake: Refer to Annex 1
- Cabin noise level: less than 80 decibels
- Towing hook of coupler lock system (According to UIC 520 standard) Refer to Annex 1
- Buffer (According to UIC 526-1 standard) Refer to Annex 1

1.2. TAMPING MACHINE

Technical data

- Driving seats: 2

- Engine Deutz
- Rated power 350 kW 2100 min-1
- Running: the machine adopts hydromechanical transmission during high speed running, hydraulic transmission for low speed running.
- Electrical device: generator 28V DC; 140A, main battery pack 24V DC 220Ah, balancing battery pack 24V DC 70Ah
- Overall dimensions of the vehicle are to be confirmed after final design, to meet the clearance requirements of Argentina.
- 6 axles, 3 bogies, including engine
- Distance between bogie pivots 13800mm, to be confirmed after final design
- Wheelbase of bogie 1800mm, to be confirmed after final design
- Wheel diameter Refer to Annex 1
- Guage 1676 mm
- Axle load ≤20 t
- Hydraulic oil 950L
- Min. working efficiency: 400m/h

Traveling extreme value:

- Min. horizontal radius: 150 m (speed limited to 20--30km/h)
- Min. vertical radius: 400m
- Max. superelevation: 150 mm
- Max. gradient (also mean the max. gradient of parking brake): 20‰

  Max. traveling speed: 80 km/h
- Max. towed speed: 100 km/h

Work extreme values:

- Max. horizontal radius: 150m
- Track max. curvature within 3 meters (machine is above): 3.3 mm/m
- Max. Working gradient: 33‰
- Vertical curve error within 10 meters: 50 mm (top to top)
- Towing hook of coupler lock system (According to UIC 520 standard) Refer to Annex 1
- Buffer (According to UIC 526-1 standard) Refer to Annex 1

1.3. BALLAST REGULATOR

Technical data

- Engine Deutz(Brand :Refer to Annex 1)
- Power 165kw 2300 min-1
- Overall dimensions of the vehicle are to be confirmed after final design, to meet the clearance requirements of Argentina.
- Wheelset: 2
- Wheelbase: about 5500mm, to be confirmed after final design
- Wheel diameterRefer to Annex 1
- Gauge 1676mm
- Axle load ≤20 t
- Diesel fuel tank capacity: about 900L
- Hydraulic oil: about 860L
- Traveling drive: static hydraulic for 2 axles
- Power generation: a three phase generator (Brand :Refer to Annex 1)
- Alternating-current generator: 28V DC, 55 A
- Battery: two 12 v DC, 230 Ah series batteries
- Middle plow: The machine is equipped with X shape middle plow, its performance is superior to the V shape front plow.
- Side plow: foldable, two way operation
- Cleaning device: adjust the cleaning depth through hydraulic cylinder
- Iron brush: near the rear axle
- On rail surface, mobile cowcatcher is used inside two axles, and a fixed cowcatcher is used outside the axles to meet the operation requirements.
- Air compression: Work pressure is 6.5 ~ 7.2bar
- Min. working efficiency: 600m/h

Traveling extreme value:

- Min. horizontal radius: 150 m (speed limited to 20--30km/h)
- Min. vertical radius: 500m
- Max. superelevation: 150 mm

- Max. gradient (also mean the max. gradient of parking brake):20‰
- Max. traveling speed: 80 km/h
- Max. towed speed: 80 km/h

Work extreme values:

- Min. horizontal radius: 90 m, middle plow can't be used if the curve radius is less than 150m.
- Track max. curvature within 3 meters (machine is above): 5.3 mm/m
- Max. horizontal working difference: 150mm
- Max. Working gradient: 33‰
- Vertical curve error within 10 meters: 50 mm (top to top)
- Towing hook of coupler lock system (According to UIC 520 standard) (Brand :Refer to Annex 1)
- Buffer (According to UIC 526-1 standard) (Brand :Refer to Annex 1)

2. LIST OF FREE OF CHARGE ATTENDANT TOOLS FOR THE LARGE-SCALE MAINTENANCE MACHINERY

The following list ispreliminary, for reference only, and the final list will be determined after final design is confirmed by the Principal.

2.1 TAMPING MACHINE

The following chart is a free of charge tool list for one tamping machine (for reference only)

No.	Name	Quantit
1	A set of standard tools	1
2	Special tools	
2.1	Nitrogen-filling tool	1
2.2	Digital multimeter	1
2.3	Low voltage electric soldering iron	1
3	Riding tools	
3.1	Car inspection hammer	1
3.2	Heavy load gear oil	1
3.3	Monkey wrench	1
3.4	Crowbar	1
3.5	Plain screwdriver	1

No.	Name	Quantit
3.6	Cross screwdriver	1
3.7	Wire-cutter	1
3.8	Fitter's hammer	1

The Principal require special tools for maintenance,routine and light maintenance of all equipment systems, KUNMING agree to provide tools for routine and light maintenance.

2.2 STABILIZING MACHINE

The following chart is a free of charge tool list for one stabilizing machine (for reference only)

No.	Name	Quantity
1	A set of standard tools	1
2	Special tools	
2.1	Accumulator nitrogen charging tools	1
2.2	Digital multimeter	1
2.3	Low voltage electric soldering iron	1
3	Riding tools	
3.1	Car inspection hammer	1
3.2	Heavy load gear oil	1
3.3	Monkey wrench	1
3.4	Crowbar	1
3.5	Plain screwdriver	1
3.6	Cross screwdriver	1
3.7	Wire-cutter	1
3.8	Fitter's hammer	1

The Principal require special tools for maintenance,routine and light maintenance of all equipment systems, KUNMING agree to provide tools for routine and light maintenance.

2.3 BALLAST REGULATOR

The following chart is a free of charge tool list for one ballast regulator (for reference only)

No.	Name	Quantity

No.	Name	Quantity
1	A set of standard tools	1
2	Special tools	
2.1	Thread seal tape	1
2.2	Electric soldering iron	1
2.3	Little lamp socket	3
2.4	Internal hexagonal wrench (Shanghai)	1
2.5	Accumulator nitrogen charging tools	1
2.6	Electrician knife	1
2.7	Work light	1
2.8	Four and a half multimeter	1
2.9	Electric iron	1
2.10	Rubber hose cleaning clamp	1
2.11	90201 pressure regulating valve special wrench	1
2.12	Attached tools of engin	1
2.13	Monkey wrench	1
2.14	Monkey wrench	1
3	Riding tools	1
3.1	Inspection hammer	1
3.2	Heavy load gear oil	1
3.3	Monkey wrench	1
3.4	Crowbar	1
3.5	Flat screwdriver	1
3.6	Cross screwdriver	1
3.7	Cutting plier	1
3.8	Fitter's hammer	1
3.9	Lifting jack	1

The Principal require special tools for maintenance,routine and light maintenance of all equipment systems, KUNMING agree to provide tools for routine and light maintenance.

3. SPARE PARTS FOR ONE YEAR OPERATION OF LARGE-SCALE MAINTENANCE MACHINERY

The Price of the Spare Parts for two years operation of Tamping, Track Stabilizer and Ballast Regulator machines would be included in the Price Breakdown. Detailed list will be submitted at the presentation of the final Design of the Tamping, Track Stabilizer and Ballast Regulator machines.

The value of parts and supplies must not exceed 6% of the overall value of the equipment, which may be used interchangeably.

CMEC must ensure that spare parts and supplies of equipment are in the market for a period of 15 years.

4. TECHNICAL DOCUMENTS FOR THE LARGE-SCALE MAINTENANCE MACHINERY

Technical documents delivered along with each set of machinery to the Principal are listed below. The following list of technical documents is preliminary while the final one will be confirmed two month after signing the contract.

Technical Documentation: All documentation submitted by CMEC will be Castilian in digital and paper, prefabrication of equipment. At least 5 copies printed per vehicle.

4.1. TAMPING MACHINE

The technical documents delivered with the tamping machine includes:

No.	Name
1	Operation Manual
2	Maintenance Manual
3	General rule of safe operation
4	Operation Manual of 2015 series engine
5	Operation Manual of TE32 hydraulic shift gearbox
6	AGC operating manual (including recording system)
7	Wheel axle bearings Maintenance
8	Generator Operation and Maintenance Manual
9	Instructions for use and maintenance for double tank air dryer

10	Instructions for installation and maintenance for hydraulic accumulator
12	Centralized lubrication system specification
13	Lining laser device specification
14	Instructions for use and maintenance for emergency diesel pump
15	Electrical System Atlas
16	Hydraulic system and pneumatic system schematic
17	The vehicle cable
18	Spare parts Atlas
19	Vehicle history book
20	Electronic vehicle information documentation CD

4.2. STABILIZING MACHINE

The technical documents delivered with the stabilizing machine includes:

No.	Document Name
1	Operation Manual
2	Maintenance Manual
3	General rule of safe operation
4	Operation Manual of 2015 series engine
5	Operation Manual of TE32 hydraulic shift gearbox
6	AGC operating manual (including recording system)
7	Wheel axle bearings Maintenance
8	Generator Operation and Maintenance Manual
9	Instructions for use and maintenance for double tank air dryer
10	Instructions for installation and maintenance for hydraulic accumulator
13	Instructions for use and maintenance for emergency diesel pump
14	Electrical System Atlas
15	Hydraulic system and pneumatic system schematic
16	The vehicle cable
17	Spare parts Atlas
18	Vehicle history book

No.	Document Name
19	Electronic vehicle information documentation CD

4.3. BALLAST REGULATOR

The technical documents delivered with the ballast regulator includes:

No.	Name
1	General drawing of ballast regulator
2	Ballast sweeping device
3	Middle plow device
4	Left/right shoulder plough device
5	Driveline device
6	Transfer case
7	Schematic diagram of brake and pneumatic system
8	Schematic diagram of drying machine
9	Axle gear box of front and rear axle
10	Hydraulic system principle diagram
11	Electric appliance arrangement diagram
12	Diesel engine control principle diagram
13	Alarm system principle diagram
14	Monitoring system principle diagram
15	Operation lighting principle diagram
16	Operation control principle diagram
17	Running control principle diagram
18	Air-conditioner control principle diagram
19	Auxiliary electrical schematic diagram
20	Electromagnetic valve connection box b50
21	Main control box B5 wiring diagram
22	B21 wiring diagram
23	B42 wiring diagram
24	Operation console layout drawing

25	Solenoid wiring diagram
26	BI3 box wiring diagram BI3
27	B53 box wiring diagram B53
28	Air lock control wiring diagram
29	Dryer control box wiring diagram
30	Running system
31	Operator manual
32	Maintenance and repair manual
33	Safe operation manual
34	Brake specification
35	Dryer installation instructions
36	Cable List
37	Attached technical material of diesel engine
38	air conditioner operation instruction
39	heater's instruction
40	Parts Catalog

5. TECHNICAL SERVICE PROGRAM FOR THE LARGE-SCALE MAINTENANCE MACHINERY

The following plan is a preliminary technical service program for the large-scale maintenance machinery while the final one will be confirmed during the technical meeting.

The warranty period of the equipment is 2 years, which shall take effect at the end of commissioning in Argentina.

5.1 CMEC will send technicians to the Principal's premise to supervise and guide the unloading, installation, commissioning, and acceptance of large-scale maintenance machinery, as well as to provide on-site technical service. The costs of travel, lodging and staff mobility will send CMEC charge

5.2 Services

- Static vehicle condition checking
- Guiding users to replace various oil
- On-site static and dynamic commission

- Running and working test
- Training in the basic principle, operation, safety and maintenance of the equipment
- Troubleshooting
- Car-following working

5.3 Within the guarantee period after delivering the maintenance machines, CMEC is in charge of sending technicians who meet the job requirements to provide after-sale services in Argentina. Service plan will be adjusted according to the actual working and using situation of different machines.

5.4 CMEC engineers will be responsible of technical training for end-user's local concerned people. For details, please refer to the technical training program.

6. TECHNICAL TRAINING PROGRAM FOR THE LARGE-SCALE MACHINERY PROGRAM

6.1 TRAINING OBJECTIVES

Helping the trainees to understand the principles, maintenance methods and some notes of each kind of large-scale maintenance machinery under the contract, letting the trainees get skilled at operating the equipment and preliminarily having emergency handling capability.

6.2 TRAINING MATERIAL AND DOCUMENTS

User's manual and maintenance.

6.3 TRAINEE REQUIREMENT

Good health physique quality is required. In particular, college degree or above, preliminary or above technical title, and over 1-year related working experience are also required for the trainees.

6.4 TRAINING PLAN

The following training plan is a preliminary plan while the final one will be confirmed after signing the main contract. CMEC will provide a preliminary training plan 15 days after signing this minute.

No.	Equipment	Training time
1	Tamping machine	Factory theory and hands-on training: 17 days/4 people; On-site hands-on training: 6 weeks/10 people.

2	Stabilizing machine	Factory theory and hands-on training: 17 days/4 people;; On-site hands-on training: 6 weeks/10 people.
3	Ballast regulator	Factory theory and hands-on training: 17days/4 people; On-site hands-on training: 4 weeks/10 people.

The costs for personnel designated by the SOF SE (passages, mobility, 5-star hotelaccommodation, transfers, etc.) for training in China should be in charge of CMEC.

For training in China and Argentina CMEC will be in charge to include a translator for each course.

All training materials will be delivered in Castilian.

During training in China CMEC should schedule visits to the railways where equipments are being used.

CMEC will be responsible for all personal expenses (transportation, mobility, housing, etc.) during the training in Argentina.

7. DETAILED TECHNICAL DESCRIPTION FOR THE LARGE-SCALE MACHINERY

7.1.XCD-16A PLAIN LINE & SWITCH TAMPING MACHINE

7.1.1. General Introduction

XCD-16A plain line & switch tamping machine shall be used in new and existent ballasted railway track construction, overhaul and maintenance, to achieve geometric correction of the plain line and switch sections and enhance the compactness of ballast.

The tamping device of this machine can move separately along the sleeper direction, with 4 tamping units, and 4/tamping tines in one unit, totally 16 tamping tines, vibration frequency 35Hz. Integral lifting & lining devices can complete the strong lifting and lining action accurately and reliably. AGC track geometric parameters computer system can provide theoretical geometric parameters for tamping machine track lifting & lining work. AGC-R track parameters record and work quality evaluating system can precisely measure the line accuracy of tamping work and

assess the work process and work quality. High speed self running drive mode is that diesel engine drive the two axis of front bogie through hydraulic mechanical shift gear box, transfer case and shaft gear box. Work travelling drive mode is hydraulic drive, the drive shafts are the two axis of front bogie and the third axle of rear bogie.

This machine adopts Germany DEUTZ TCD 2015 V8/ water cooled engine (rated power 350kW), and it can meet COMⅢstandard, while ECUⅢ and CAN/Profinet monitor the temperature, pressure and liquid level of the engine. This machine is equipped with brake system (Refer to Annex 1). The complete machine includes 3 driver cabs. The cab has the function of sound insulation and noise reduction, and equipped with air conditioner system, side-looking push-pull outlook window, automatic glass electrical heat defrosting and window shade etc.(Refer to Annex 1). The front cab is set for forward moving and No.2 work operating position; the rear cab is set for backward moving, the middle cab is set for main work operating. High speed operating personnel shall have professional training and get the certificate of local railway administrative department; the operating personnel also need to be trained and approved by professional organization. This machine is equipped with 8 cameras for video surveillance system which will monitor the vehicle running and main work area, and it can store the video datum of 200 hours.

Ancillary equipment: laser aligning system, roof warning light, pneumatic horn etc.

7.1.2. Main technical parameters

Parameter Item	Parameter	Unit
Gauge	1676	mm
Length	26,320	mm
Height	4,130	mm
Width	3,180	mm
Distance between pivot centers	13,800	mm
Bogie wheel base	1,800	mm
Engine output power	350	kW
Work efficiency on plain line	0.4～0.6	km/h

Switch work efficiency tamping unit 12#	No more than 50	min
Tamping device excited frequency	35	Hz
Min. traveling radius	150	m
Min. working radius	150	m
Min. vertical radius	400	m
Max. self-propelled speed	100	km/h
Max. towed speed	120	km/h

* Max. self-propelled speed and Max. towed speed shall depend on local railway operation regulation and railway condition.Inside the cabin will not exceed 80 dB.

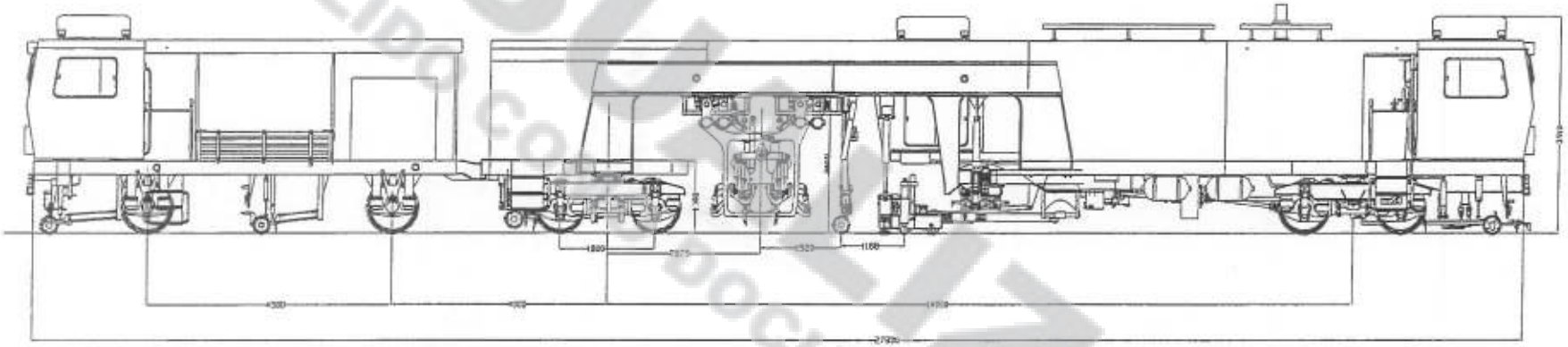

XCD-16A Outline Reference Drawing (with material wagon)

7.1.3. Technical parameters and structure characteristics

1. Main dimension and weight

(when the machine is in high speed operation condition)

Gauge	1,676	mm
Length	26,320(undetermined)	mm
Height	4,130(undetermined)	mm
Width	3,180(undetermined)	mm
Distance between pivots centers	13,800(undetermined)	mm
Bogie wheel base	1,800	mm
Wheel diameter	915	mm
Coupler (to be determined)	Reference to Annex-1	
Height from central line of	Reference to Anexx-1	

* This machine is specially designed for the use of hot and desert area.

2. Main frame

The machine adopts the most advanced modern welding technology and process, and sectional materials and steel structure are firmly welded and formed together, thus the structure strength of main frame can meet the requirements of strong operation load vehicle dynamics stability, ensuring strong and durable.

The front end of main frame and end of material wagonare equipped with coupler and buffer device on both sides for the convenience of towing with other vehicles.

3. Bogie

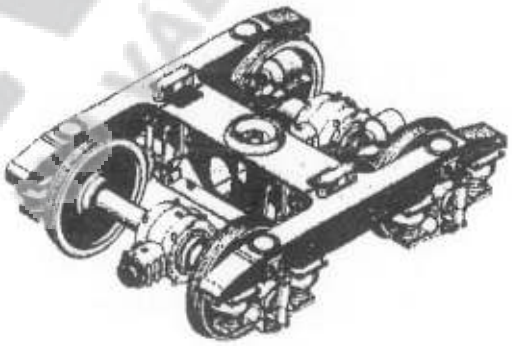

It adopts two axis bogie structure. The front bogie is power bogie, and involve in the drive of working running and high speed running; the rear bogie is the driven bogie, one of the axis (the third axle) involve in the work running drive.

3.1.

Wheel set is consisted of whole forging axle and rolling wheels, and it adopts oil press process to form pressing modeling.

CHINESES STANDARDS: TB/T 1463-2003

3.2. Axle bearing

The ends of axle which located in the lateral side of the wheel adopt axle large-sized special roller bearing through pressing process. The brand of bearing shall refer to Annex-1.

3.3. Cone rubber spring suspension device

Between the suspended axle box and bogie frame is the metal rubber spring, which can effectively absorb the load and impact vibration in the process of vehicle running and working.

3.4. Oil buffer

Hydraulic buffer is the auxiliary damping components of suspension device, which can absorb the vibration between axle box and bogie frame.

3.5. Jacking cylinder

In the process of working, fasten the metal rubber spring suspension device through jacking cylinder.

3.6. Cowcatcher

The cowcatcher located in the outermost end of the front and rear bogie, and is used to eliminate the obstacles on rail top.

4. Engine and power transmission

4.1. Engine

- Germany Deutz water cooled engine, engine emission accord with COM III standard.
- Engine type: TCD 2015 V8
- Rated output power: 350kW
- Engine is installed in the middle part of main frame, and has special metal rubber spring to support and absorb vibration.
- Engine structure makes its maintenance easy.

- Engine stop button is set in cab and vehicle surrounding, and convenient to stop the engine work at emergency situation.

4.2. Engine temperature monitor system

Temperature sensor is set on the engine and accessed into temperature control system. When engine temperature reaches pre-set warning temperature, the system will adopt sound and light alarm; when the temperature continues increasing and exceeds the pre-set limit temperature value, the engine will adopt urgent alarm and stop itself. Once the engine temperature return to normal, sound and light alarm will be automatically disarmed.

4.3. High speed running power transmission

When the machine is in high speed running, clutch is in disengaged state. Engine output power will be transmitted to pump drive gear box through transmission shaft, then to hydraulic transmission gearbox, after that to transfer case, at last transmitted to drive gear box which will drive the whole machine high speed running.

High speed running operation will be finished in front and rear cab high speed operation position.

4.4. Work running power transmission

When the machine is in work running, clutch is in disengaged state. Engine output power will be transmitted to pump drive gear box through transmission shaft, and clutch is in disengaged state, and the hydraulic motors installed in pump drive gear box will get power and start to work. Transfer case work drive motor and the third axle work auxiliary drive motor will get hydraulic source, and drive the first, second and third axle separately, and realize the work running of the whole machine.

Work running control is within the cab, the running and brake signal will be given from foot switch.

4.5. Max. traveling and towed speed

- Max. traveling speed: 100km/h
- Max. towed speed: 120km/h.

Note: Max. traveling speed and Max. towed speed will depend on the local railway operation regulations and railway condition.

5. Brake system

5.1. Brake method – Refer to Annex-1

Brake method: vehicle tread brake, all the wheels involved in the brake.

The vehicle is equipped with brake train pipe.

Brake control method:

- High speed running: operation brake handle control, air brake.
- Work running: program automatic control, hydraulic brake.

5.2. Brake system– Refer to Annex-1

It adopts Annex-1 air brake. It has the function of air intake (direct) brake, and air exhaust (indirect) brake. Commonly after full brake, brake cylinder relief time should be less than 10 s.

5.3. Brake

High speed operation position located in front and rear cab adopts Annex-1 brakesystem operation integrated console, and can use operation handle to brake and remit.

5.4. Emergency brake

High speed operation position located in front and rear cab adopts Annex-1 brake system operation integrated console, and can use emergency brake button to achieve emergency brake.

5.5. Bypass brake

Suppressed.

5.6. Parking brake

This machine is set hand brake device, braking ratio is not less than 20%, and the machine can park at the gradient of 20‰.

6. Pneumatic system

Compressed air installed in the engine will provide pressure for pneumatic system.

Compressed air source will supply for the following device:

1) Air brake system
2) Pneumatic system for the complete machine
3) Air horn alarm device

Air source device include: filter, cooler, pressure regulator, air reservoir, oil-water separator and air lubrication device etc.

Air drier is the necessary air processing device.

7. Hydraulic system

This system is equipped with hydraulic pump, as an accessory of the Diesel Engine, and this hydraulic pump has high performance and high reliability which could provide hydraulic oil source for machine running and working.

This system is equipped with hydraulic accumulator which can provide stable hydraulic oil source for the system.

This system is special equipped with hydraulic radiator which will make sure the hydraulic system temperature is in a stable condition during its running and working.

All kinds of magnetic valve can produce the accurate action.

Hydraulic tank can filter oil suction and oil return, and add an independent hydraulic oil secondary filter device to make sure the system cleanliness.

The hoses for the hydraulic system will come from PARKER or AEROQUIP.

7.1. Hydraulic emergency pump

The hydraulic emergency pump is a separate Hydraulic pump electrically driven, which can normally collect the whole working device under the circumstances of engine failure.

8. Electric system

8.1. Electric control system

The control power supply of this machine is 24V DC, and is used for engine starting circuit, control circuit, and illumination etc.

Electric control system is DNCS digital network control system.

Electronic components adopt modular design, which are safely operated and conveniently maintained.

Because all the electronic components boxes are exposed to wild weather, so it adopts waterproof design.

8.2. Power supply

One 140A generator is installed in the engine.

Two 12V-230Ah main accumulator adopts series connection, and as main battery for the working.

Two 12V-80Ah special accumulator with high performance for engine is used as starting battery for the engine.

8.3. Illumination

This machine is equipped with drive lighting fittings conformed to railway operation standard.

This machine is also equipped with enough illuminance lights for working area, vehicle outline, and mark light and tail light in the front and rear part.

8.4. Warning device

The top of front and rear cab are all equipped with warning light.

The front and rear cab are also equipped with siren horn.

8.5. Electrical control system

DNCS digital network control system is a new high speed digital network control system based on ProfiNET bus technologies, whose hardware is SIEMENS industry computer IPC and S7300 series PLC.

The complete running site and work site is constructed of PLC power module, CPU module, I/O module, communication module. ProfiNET rate can reach 100M.

DNCS digital network control system integrate the self diagnose function and remote diagnose function. Self diagnose can assist the operator in automatically diagnosing the fault phenomenon in the process of operating, and give treatment strategy. Remote diagnose system can send the present and failure data to data center through public network system, and realize the remote fault diagnose for on-site customer to improve the promptness and accuracy of service.

The biggest advantage of DNCS digital network control system is that its hardware are reliable universal standard products which improves product interchangeability, effectively decrease the maintenance cost and provide running efficiency.

8.6. Air condition system

380V/220V AC power supply is for air conditioner. Cold /hot all- in- one.

8.7. 220VAC illumination

The front and rear cab are provided with extra 220VAC LED lighting fitting, which will guarantee the cab illumination when the control power supply can't be turned on.

9. Cab

This machine contains 3 cabs, and the cabs have good soundproof and heat-insulation properties. Three-phase alternating current driven cold and warm air conditioner system to make sure the temperature are not lower than 20°C when the outside temperature is as low as -10°C, and the temperature is not higher than 25°C when the outside temperature is as high as 50°C.Inside the cabin will not exceed 80 dB

Toxicity and flammability will be according to the Annex I.

The front and rear cab is equipped with large outlook windshield to make sure the operation safety.

WINDSHIELD, the following test Protocols will be required:

- Standards to be applied: GB 18045-2000
- There will be electric fan in the up -front of windshield.
- Laminated glass with electric defroster, three glasses (6 mm + film + 6 mm + silicon / rubber / similar min 2 mm + 6 mm).

When the machine is in high speed running, the view and comfort degree of the operator accord with related railway vehicle standard.

The channel between front cab and main operating cab are complete connecting.

The height of cab is 2 m. Inside the cab will be installed: glass holders, electric heater for kettle.

9.1. Rear cab-high speed running operation position
The back of rear cab is backward running operation position.

9.2. Middle cab -- machine operation position.
The monitor should be at least 55 inches.

9.3. Front cab
The cab has two operation positions.

The left-side driving position should be used when the machine is in high speed running.

During the operation, the No.2 operation position, which is the right-side operation position, is responsible for front end input control, AGC rail geometrical computer system operation, and recording system operation.

9.4. Interphone system

Entire machine is equipped with modularized interphone system, between the three cabs and two external operators equipped with headphones and microphone.

7.1.4. Tamping device

The machine is equipped with switch tamping device, and the structure of it is the combination of 4 tamping sub-units. Each tamping sub-unit could work separately, and the tamping tines can be tilting as well to adapt different areas of turnout line.

Each tamping sub-unit have 4 tamping tines.

The maximum insertion depth of tamping tine can reach to 560mm under the rail surface.

Tamping unit of XCD-16A

1. Tamping device

The tamping device vibration adopts the pattern of synchronization constant pressure vibration.

The vibration produces a typical eccentric vibration of vibrating shaft. Based on the theory of eccentric shaft, connecting rod, and rocker, the tamping tines can ultimately produce compulsive vibration.

The vibration frequency is 35Hz.

The tamping arm support of tamping device adopts high intensity self-lubricating copper alloy bearing, and the lubrication method is grease lubrication which is more eco-friendly and reliable.

Each eccentric vibrating shaft of tamping device sub-unit installs two split clamping cylinder, making the device much easier to maintain.

2. Lifting and insertion of tamping device

Each tamping device sub-unit is controlled by hydraulic proportional valve controlled lift cylinder. There are three hydraulic proportional valves in total, controlling the lifting and insertion of tamping device.

3. Tamping tine configuration

The tamping device is equipped with the long life mosaic Wo-Mn cemented carbide. The tamping tine is featured with wear resistant, impact preventive and other long lifespan characteristics.

4. Centralization lubrication

The tamping device is equipped with a set of grease centralization lubrication device, regularly lubricating the two sides of tamping device and transverse sliding sleeve.

7.1.5. Sleeper-end consolidator.

The machine is equipped with two sleeper-end consolidators on the left and right side.

7.1.6. Lifting & lining device

Adopting integrated line lifting & lining device.

7.1.7. Leveling and super-elevation system

Longitudinal leveling system adopts the measurement of double chord three points.

The leveling sensor detects longitudinal accuracy of the line, and takes part in closed-loop controlling of longitudinal leveling.

The electronic pendulum detects lateral super-elevation accuracy of the line, and takes part in closed-loop controlling of lateral super-elevation.

1. Longitudinal leveling system

The system utilizes front measuring trolley, middle measuring trolley and rear measuring trolley. The front and back leveling measuring bar tension the leveling string on the top of left -right side rail while the middle measuring trolley installed a leveling measure sensor.

2. Lateral super-elevation measuring system

The lateral super-elevation measuring of the line adopts electronic pendulum to measure.

The super-elevation system has three electronic pendulum in total, measuring the lateral level of the line from the front part (non-operation area), central part (operation area), and rear part (completed operation area).

7.1.8. Alignment system

As with the leveling and super-elevation system, the alignment system also belongs to the standard configuration of a tamping machine. It is used to complete the correction of the line direction.

Lining operation principle

Through adopting single string three points measurement pattern, the lining sensor could detect the vector distance value and take part in lining servo controlling.

7.1.9. Laser aligning system

The standard configuration of tamping machine is also equipped with one-dimensional laser aligning system which could carry out more accurate correction for line and the straight part of the switch.

7.1.10. AGC track geometric parameters computer

AGC track geometric parameters computer system adopts hardware architecture as DNCS digital network control system. The main devices are all IPC industrial computer of SIEMENS company and PLC of S7300 series. The system could run on Windows series, mainly supporting Win7, WinXP, Win8 and other system software. As the I/O interface of the AGC system, industrial computer PLC is the core processing section of AC system and get connection by the Ethernet. In addition, different size can be chose for the equipped industrial computer, including 12", 15", 17", etc. Principal is authorized to operate the AGC software. Offering an external USB interface which helps the import and export of the external data.

Equipping with an industrial keyboard which is used for the operation of AGC system.

This system will be at least equal to ALC of Plasser&Theurer.

7.1.11. AGC-R track parameters record and work quality evaluating system

According to EN13848 standards, AGC-R track parameters record and work quality evaluating system, can precisely measure the line accuracy of tamping work and assess the work quality. Track geometrical parameter accuracy includes distance vector of the line, lateral level, longitude level, and torsion resistance. The line quality includes track raise quantity, clamp time, etc. of tamping work. In addition, it could also collect and analyze the work quality, as well as get the orientation chart, the inking chart of 15 curve with identifier, and the deviation report of line.The program should give the curves automatic correction option.

Equipping with a network model colored laser printer which could print out the icon and report.

AGC-R track parameters record and work quality evaluating system adopts physical design integrated with AGC track parameters computer, namely to add I/O module into AGC track parameter computer hardware and according AGC-R parameter record as well as the evaluating system software of work quality.

Both AGC and AGC-R system adopts integrated design which bring the universality, stability and reliability of the system hardware. In addition, it also promotes the direct integration of AGC parameter calculation and parameter recorded data.

This system will be at least equal to ALC of Plasser&Theurer.

7.1.12. Paint mark-

The surface clearness of all steel proximate matter, panel and each parts of machine are in accordance with Sa2 1/2 level or above of GB/T8923 standard before the painting. The good part of finished impeller blasting pretreatment and shop primer film are regarded as meeting standard. **Refer to Annex I for coating characteristics.**

The finishing coat could keep its good anti-corrosion in 8-10 years and the finishing cost will not fade in 4-5 years as well. (to be determined in Bs.As.). **Refer to Annex I for coating characteristics.** All the font type of logo and label could be ensured according to buyer's requirement.

7.2.WD-400A track dynamic stabilizer

7.2.1. General

WD-400A track dynamic stabilizer can be used for the new construction, overhaul and maintenance operation of ballasted railway lines. By forcing the track section to vibrate, the ballasts can closely fill each other and the stability of ballast bed can be improved.

The machine can realize the stabilization operation for plain line, and it has 2 sets of dynamic stabilizing units, whose vibrating frequency and vertical down force are 0~42Hz and 0~24Tn respectively.

The machine has two drive modes: high Speed drive and low speed (working) drive. High-speed adopts hydro-mechanic transmission, with a speed of 100km/h; low speed running adopts static hydraulic transmission, the speed is 0~2,5km/h. It can be trailed with other locomotives when without power, the towed speed is 0~120km/h. The drive mode of high speed self-propelled running drives the two axles of front bogie through hydro-mechanic shift gearbox, transfer case to axle gearbox. The drive mode of work running is static hydraulic transmission, the drive axles are the two axles of front bogie and the third axle of rear bogie.

This machine adopts Germany DEUTZ TCD 2015 V8/ water cooled engine (rated power 350kW), and it can meet COMⅢstandard, while ECUⅢ and CAN/Profinet monitor the temperature, pressure and liquid level of the engine. This machine is equipped with **Refer to Annex-1**brake system, operating handle of operating cab. The complete machine includes two driver cabs. The cab has the function of sound insulation and noise reduction, and equipped with air conditioner system, side-looking push-pull outlook window, automatic glass electrical heat defrosting and window shade etc. The front cab is set for main driver and assistant driver position; the rear cab is set for backward moving and main work operating position. High speed operating personnel shall have professional training and get the certificate of local railway administrative department; the operating personnel also need to be trained and approved by professional organization.

This machine is equipped with 8 cameras for video surveillance system which will monitor the vehicle running and main work area, and it can store the video datum of 200 hours.

Ancillary equipment: roof warning light, pneumatic horn etc.

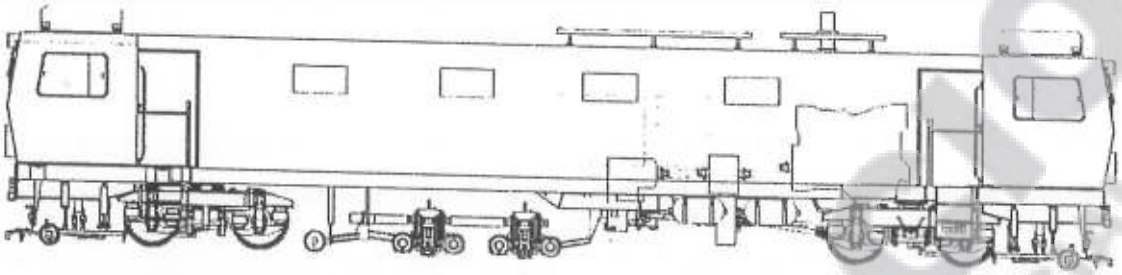

7.2.2. Main technical data

Item	Value	Unit
Gauge	1,676	mm
Length	25940(undetermined)	mm
Height	3180(undetermined)	mm
Width	4110 (undetermined)	mm
Distance between bogie pivots	12,000	mm
Axle load	~20	t
Engine output power (traveling/working)	350	kW
Working efficiency	0.2～2.5	km/h
Vibration frequency	0～42	Hz
Min. running curve radius	150	m
Min. work curve radius	250	m
Max. self propelled Speed *	100	km/h
Max. towed Speed *	120	km/h

* Max. self propelled Speed and Max. towed Speed depends on user's local railway traveling standards and track conditions.

Technical parameters and structural characteristics

1. **Main dimensions and weight**

(Under high speed running conditions)

Gauge	1,676	mm
Length	25940 (undetermined)	mm
Height	3180 (undetermined)	mm
Width	4110 (undetermined)	mm

Distance between bogie pivots	12,000	mm
Bogie wheelbase	1,800	mm
Wheel diameter	Φ915	mm

2. Main frame

The machine adopts the most advanced modern welding technology and process, and sectional materials and steel structure are firmly welded and formed together, thus the structure strength of main frame can meet the requirements of strong operation load vehicle dynamics stability, ensuring strong and durable.

The main frame is equipped with coupler and buffer device on both sides for the convenience of towing with other vehicles.

3. Bogie

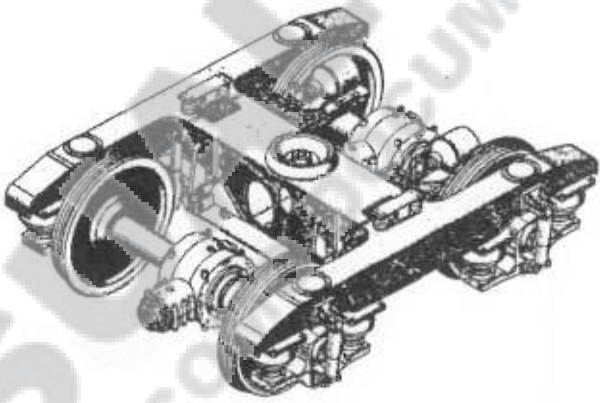

Driving bogie

It adopts two axis bogie structure. The front bogie is power bogie, and involve in the drive of working running and high speed running; the rear bogie is the driven bogie, one of the axis (the third axle) involve in the work running drive.

3.1. Wheel set

Wheel set is consisted of whole forging axle and rolling wheels, and it adopts oil press process to form pressing modeling.CHINESES STANDARDS: TB/T 1463-2003

3.2. Axle bearing

The ends of axle which located in the lateral side of the wheel adopt axle large-sized special roller bearing through pressing process. The brands will be SKF, FAG or TIMKEN.

3.3. Cone rubber spring suspension device

Between the suspended axle box and bogie frame is the metal rubber spring, which can effectively absorb the load and impact vibration in the process of vehicle running and working.

3.4. Oil buffer

Hydraulic buffer is the auxiliary damping components of suspension device, which can absorb the vibration between axle box and bogie frame.

3.5. Jacking cylinder

In the process of working, fasten the metal rubber spring suspension device through jacking cylinder.

3.6. Cowcatcher

The cowcatcher located in the outermost end of the front and rear bogie, and is used to eliminate the obstacles on rail top.

4. Engine and power transmission

4.1. Engine

Germany Deutz water cooled engine, engine emission accord with COM III standard.

Engine type: TCD 2015 V8

Rated output power: 350kW

Engine is installed in the middle part of main frame, and has special metal rubber spring to support and absorb vibration.

Engine structure makes its maintenance easy.

Engine stop button is set in cab and vehicle surrounding, and convenient to stop the engine work at emergency situation.

4.2. Engine temperature monitor system

Temperature sensor is set on the engine and accessed into temperature control system. When engine temperature reaches pre-set warning temperature, the system will adopt sound and light alarm; when the temperature continues increasing and exceeds the pre-set limit temperature value, the engine will adopt urgent alarm and stop itself. Once the engine temperature return to normal, sound and light alarm will be automatically disarmed.

4.3. High speed running power transmission

When the machine is in high speed running, clutch is in disengaged state. Engine output power will be transmitted to pump drive gear box through transmission shaft, then to hydraulic transmission gearbox, after that to transfer case, at last transmitted to drive gear box which will drive the whole machine high speed running.

High speed running operation will be finished in front and rear cab high speed operation position.

4.4. Work running power transmission

When the machine is in work running, clutch is in disengaged state. Engine output power will be transmitted to pump drive gear box through transmission shaft, and clutch is in disengaged state, and the hydraulic motors installed in pump drive gear box will get power and start to work. Transfer case work drive motor and the fourth axle work auxiliary drive motor will get hydraulic source, and drive the first, second and third axle separately, and realize the work running of the whole machine.。

Work running control is within the cab, the running and brake signal will be given from foot switch.

4.5. Max. traveling and towed speed

- Max. traveling speed: 100km/h
- Max. towed speed: 120km/h.

Note: Max.traveling speed and Max. towed speed will depend on the local railway operation regulations and railway condition.

5. Brake system

5.1. Brake method – Refer to Annex-1

Brake method: vehicle tread brake, all the wheels involved in the brake.

The vehicle is equipped with brake train pipe.

Brake control method:

- High speed running: operation brake handle control, air brake.
- Work running: program automatic control, hydraulic brake.

5.2. Brake system– Refer to Annex-1

It adopts Annex-1 air brake. It has the function of air intake (direct) brake, and air exhaust (indirect) brake. Commonly after full brake, brake cylinder relief time should be less than 10 s.

5.3. Brake

High speed operation position located in front and rear cab adopts Annex-1 brake system operation integrated console, and can use operation handle to brake and remit.

5.4. Emergency brake

High speed operation position located in front and rear cab adopts Annex-1 brake system operation integrated console, and can use emergency brake button to achieve emergency brake.

5.5. Bypass brake

Suppressed.

5.6. Parking brake

This machine is set hand brake device, braking ratio is not less than 20%, and the machine can park at the gradient of 20‰.

6. Pneumatic system

Compressed air installed in the engine will provide pressure for pneumatic system.
Compressed air source will supply for the following device:

1) Air brake system
2) Pneumatic system for the complete machine
3) Air horn alarm device

Air source device include: filter, cooler, pressure regulator, air reservoir, oil-water separator and air lubrication device etc.
Air drier is the necessary air processing device.

7. Hydraulic system

This system is equipped with hydraulic pump, and this hydraulic pump has high performance and high reliability which could provide hydraulic oil source for machine running and working.

This system is equipped with hydraulic accumulator which can provide stable hydraulic oil source for the system.

This system is special equipped with hydraulic radiator which will make sure the hydraulic system temperature is in a stable condition during its running and working.

All kinds of magnetic valve can produce the accurate action.

Hydraulic tank can filter oil suction and oil return, and add an independent hydraulic oil secondary filter device to make sure the system cleanliness.

The hoses for the hydraulic system will come from PARKER or AEROQUIP.

7.1. Hydraulic emergency pump

The hydraulic emergency pump is a separate Hydraulic pump electrically driven, which can normally collect the whole working device under the circumstances of engine failure.

8. Electric system

The control power supply of this machine is 24VDC, and is used for engine starting circuit, control circuit, and illumination etc.

Electric control system is DNCS digital network control system.

Electronic components adopt modular design, which are safely operated and conveniently maintained.

Because all the electronic components boxes are exposed to wild weather, so it adopts waterproof design.

8.1. Power supply

One 140A generator is installed in the engine.

Two 12V-230Ah main accumulator adopts series connection, and as main battery for the working.

Two 12V-80Ah special accumulator with high performance for engine is used as starting battery for the engine.

The maintenance and replace shall accord with standard: DIN 43539-2 (or other standard).

8.2. Illumination

This machine is equipped with drive lighting fittings conformed to railway operation standard.

This machine is also equipped with enough illuminance lights for working area, vehicle outline, and mark light and tail light in the front and rear part.

8.3. Warning device

The top of front and rear cab are all equipped with warning light.

The front and rear cab are also equipped with siren horn.

8.4. Electrical control system

DNCS digital network control system is a new high speed digital network control system based on ProfiNET bus technologies, whose hardware is SIEMENS industry computer IPC and S7300 series PLC.

The complete running site and work site is constructed of PLC power module, CPU module, I/O module, communication module. ProfiNET rate can reach 100M.

DNCS digital network control system integrate the self diagnose function and remote diagnose function. Self diagnose can assist the operator in automatically diagnosing the fault phenomenon in the process of operating, and give treatment strategy. Remote diagnose system can send the present and failure data to data center through public network system, and realize the remote fault diagnose for on-site customer to improve the promptness and accuracy of service.

The biggest advantage of DNCS digital network control system is that its hardware are reliable universal standard products which improves product interchangeability, effectively decrease the maintenance cost and provide running efficiency.

9. Cab

This machine contains 2 cabs, and the cabs have good soundproof and heat-insulation properties. Three-phase alternating current driven cold and warm air conditioner system to make sure the temperature are not lower than 20°C when the outside temperature is as low as -10°C, and the temperature is not higher than 25°C when the outside temperature is as high as 50°C.Inside the cabin will not exceed 80 dB

Toxicity and flammability will be according to the Annex I.

The front and rear cab is equipped with large outlook windshield to make sure the operation safety.

WINDSHIELD, the following test Protocols will be required:

- Standards to be applied: GB 18045-2000
- There will be electric fan in the up -front of windshield.
- Laminated glass with electric defroster, three glasses (6 mm + film + 6 mm + silicon / rubber / similar min 2 mm + 6 mm).

When the machine is in high speed running, the view and comfort degree of the operator accord with related railway vehicle standard.

The channel between front cab and main operating cab are complete connecting.

The height of cab is 2m.

9.1. Rear cab-with operation seat

Rear cab has two operation seats, rear driving control seat and main operation seat.

9.2. Front cab

The front cab has two operation seats, driving seat and assistant driver seat.Inside the cab will be installed: glass holders, electric heater for kettle.

9.3. Interphone system

Entire machine is equipped with modularized interphone system.

7.2.3. Dynamic stabilizing device

Stabilizing device is main working device of WD-400A stabilizer, and it is composed of hydraulic motor Rexroth or Parker of 184 KW, transmission shaft, stabilizing device I and II, four-bar mechnasim etc., its assembly drawing is shown below:

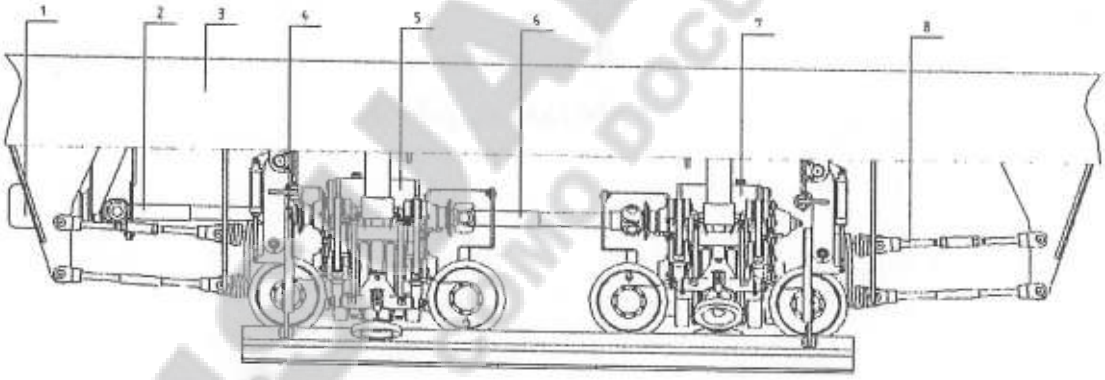

Stabilizing device installation schematic diagram

Two sets of the same stabilizing devices are installed on the machine. Via rubber vibration absorbers, four connecting bar mechanism fix the stabilizing devices to the machine frame in form of joints. Under the middle machine frame, the stabilizing devices are mounted, and can be lifted or lowered by lifting hydraulic cylinders.

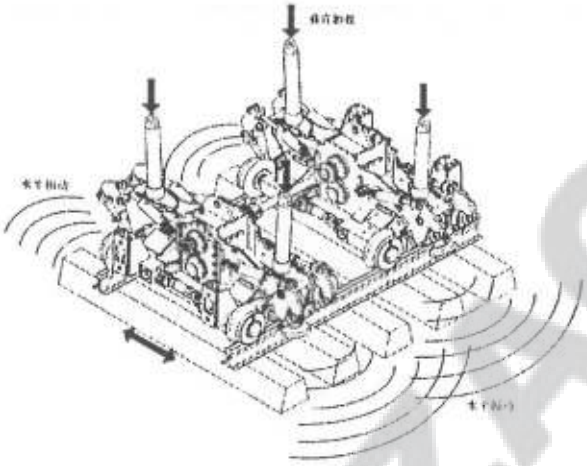

Stabilizing device working principle diagram - vertical load horizontal vibration

Before stabilizing operation, the rail support devices and clamp devices integrate the stabilizing devices and rail skeleton as a whole. When machine works and travel at low speed, a hydraulic pump, by a transmission shaft, drives stimulating devices of stabilizing devices, and syncing vibration is generated, force the rail skeleton and ballast to vibrate, make ballast move and get denser. Meanwhile, two up right cylinders above the every rail, controlled by electrical-hydraulic proportional close circuit, press the rails automatically, make the rails lower evenly to amount preset. And therefore the track stability and resistant in cross direction are enhanced. After stabilizing operation finish, the stabilizing devices are lifted by the lifting hydraulic cylinders, and are locked firmly to the machine frame by pneumatic locking mechanisms to ensure the safety.

7.2.4. Measurement system

Measurement system is composed of front measuring trolley, rear measuring trolley, deviation measuring trolley, one aligning chord, one vector distance sensor, one leveling sensors and three horizontal level sensor (electronic pendulum).

Measurement system can obtain the current line value of direction, height and level. Using high and low parameter, comparing with the given sinkage parameters, under the closed loop control of electrical and hydraulic proportion. The machine can automatically exert down force for each rail, make the track sink evenly. Other measuring parameters are only used to display and record.

7.2.5. Painting and marks – Refer to Annex-1

All the font type of logo and label could be ensured according to buyer's requirement.

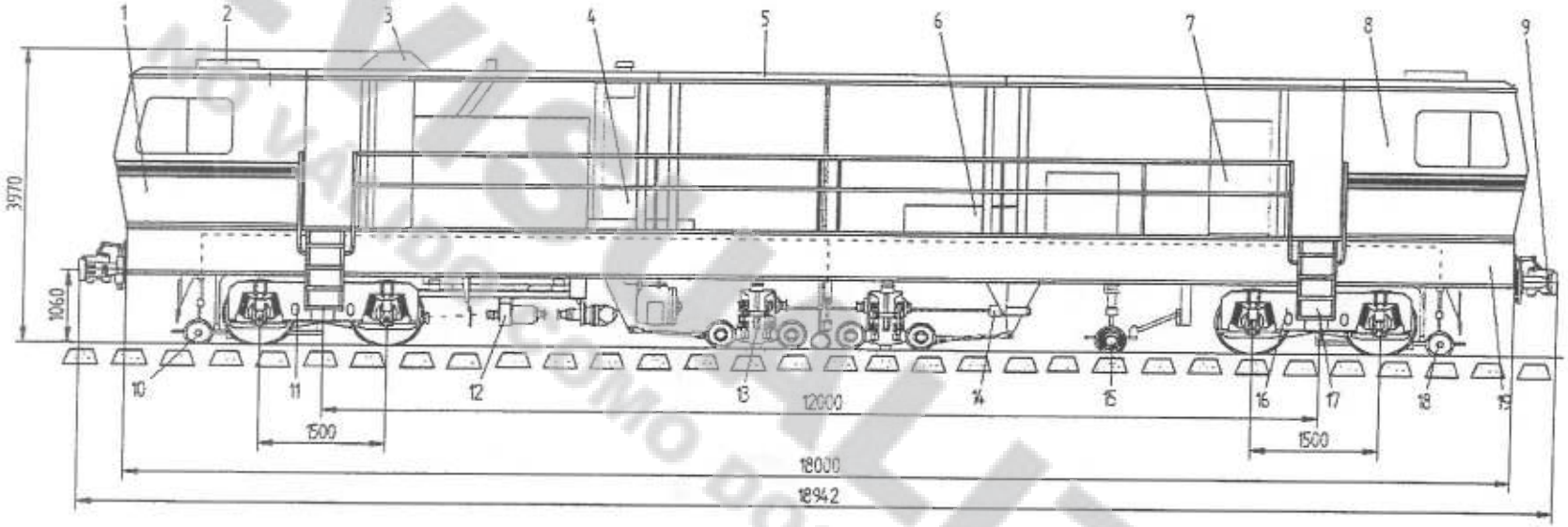

Main reference view of WD-400A stabilizer

1 Working cab 2 Air-conditioning 3 Engine room 4 Hydraulic tank 5 Ceiling 6 Diesel oil tank 7 Diesel generating sets 8 Operation cab 9 Coupler and Buffer device 10 Rear measuring car 11 Driving bogie 12 Power transmission system 13 Stabilizing device 14 Vibration motor and mounting seat 15 Versine measuring car 16 Driven bogie 17 Vehicle ladder 18 The front measuring car 19 Main frame

ANEXO II

0425

7.3. SPZ-200A BIDIRECTIONAL BALLAST REGULATOR

7.3.1. Main application and function

1. Application

SPZ-200A bidirectional ballast regulator (hereinafter referred to as "regulator") is suitable for ballast distributing and regulating, can achieve railway ballast bed shape requirements.

2. Main function

Side plough pushes the surplus ballast on both sides of ballast bed to the upper part of the ballast bed or replenishes the ballast to the insufficient area, in the meanwhile, regulates the lateral part (the appropriate angle of the structure gradient). Middle plough picks the upper part ballast and re-set them according to the guide plate position. Next, sweeping device cleans the remained stones on the sleeper.

Advantages

- Avoid railway bending
- Reasonable structure of ballast bed profile
- Uniform distribution of ballast

Regulator can adapt Argentina 1676mm railway condition. It can withdraw the side plough when obstacles exist on the roadside, which will protect the accessory equipment and electric devices along the track from damage. This machine is equipped with emergency devices, which can quickly reset when the working device has failure, to insure the working safety and running safety.Inside the cab will be installed: glass holders, electric heater for kettle.

Regulator according with Argentina broad railway clearance requirements.

Regulator is with onboard power source, and it can bidirectional travel. The rear part is equipped with cab.

Regulator working device is consisted of middle plough, side plough and sweeping device. The main function of the middle plough and side plough is to assist the distributing and regulating working of the ballast bed, to achieve the uniform distribution and section profiling of ballast bed. The function of the sweeping device is to clean the residual ballast on the sleeper and fastener, and move them to the shoulder.

The regulator has emergency processing function when a failure happens, and it can be towed traveling with locomotive.

The regulator has status inspection and alarm function.

The regulator has good reliability and necessary design redundancy.

The regulator has thorough safety precautions.
The regulator will not cause any damage to the devices along the track when it is in working condition.

7.3.2. Main technical standard

1. Main technical parameters

1) Structure parameters

- Gauge: 1676 mm
- Max. axle load: ≤ 20 t
- Coupler: Refer to Annex-1
- Coupler middle height above rail surface: Refer to Annex-1
- Clearance: According with Argentina broad gauge railway clearance standard

2) Travelling parameters

- Max. travel speed by own power (bidirectional): 80 km/h
- Max. travel speed towed: 80 km/h
- Max. track gradient(Max. track gradient in parking brake condition): 20 ‰
- Power Transmission: Biax hydraulic transmission
- Min. horizontal radius: 150 m
- Min vertical radius: 500 m
- Max. track supper elevation: 150 mm
- Max. Working gradient: 33‰
- Emergency braking deceleration: 1.0m/s²
- Service braking deceleration: 0.8m/s²

3) Working parameters

- Min. Working speed: 0.1km/h
- Max. Working speed: 8km/h
- Min. horizontal radius: 100m, when the curve radius is less than 150 meters (the middle plough can't be used)
- Allowable track max. curvature within 3 meters: 5.3 mm/m
- Max. horizontal tolerance in working condition: 150mm
- Max. gradient: 33 ‰

2. Other main technical parameters

- Engine: Deutz BF8L513
- Engine min. rated power: 210kw 2300 rmin-1

- Alternating-current generator: 24V DC
- Battery: Two 12V DC, 230 Ah series battery
- Dimension(L×W×H): 13980mm×3150mm×3900mm (Initially set)
- Fuel tankvolume: 900L
- Hydraulic tank volume: 860L
- Normally operator: 5 persons (1 person for main operation, 2 persons for auxiliary operation, and the other 2 for safety protection on the two ends of the railway)

3. Safety Protection

The regulator adopts interlocking between work and high speed travel to avoid faulty operation. Working device locking adopts secondary protection, mechanical locking and cylinder locking to protect detachment when operation. The safety warning logo are marked on the vehicle, such as no staying around the working device in working condition, aerial electricity protection and aerial fire protection etc., and the derail up and down points, suspension point are set up on the vehicle. The warning logo also includes operation precautions logo, tow precautions etc. Safety protection execute according to Ministry of Railway large maintenance related standard.

4. Structure of machine and system settings

Bidirectional ballast regulator is consisted of engine, power transmission system, braking and pneumatic system, travel mechanism, hydraulic system, electrical system, sweeping system, middle plough, side plough, frame and cab etc.

4.1. Regulator general layout

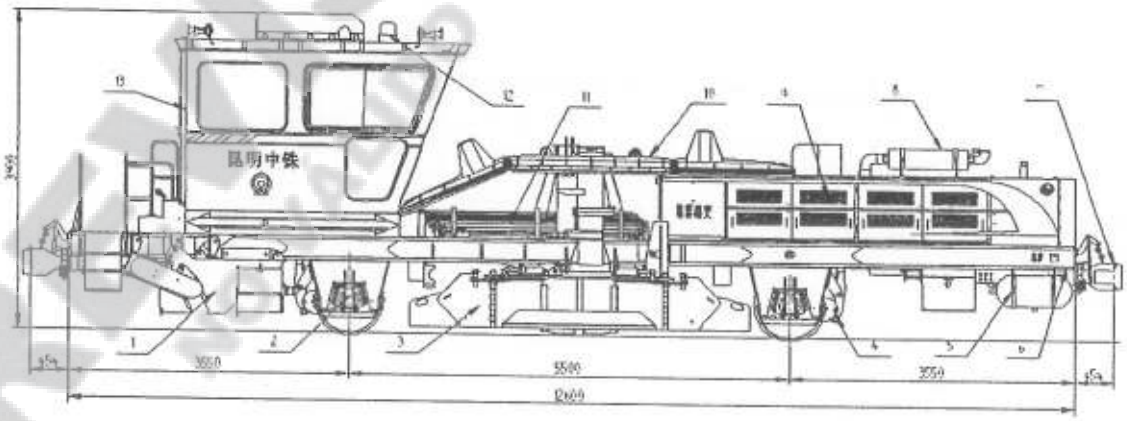

SPZ-200A bidirectional ballast regulator outline drawing

1—Cleaning device; 2—Travelling device; 3—Middle plough device; 4—Basic Braking; 5—Brake and pneumatic system; 6—Frame; 7—Traction device; 8—Diesel engine; 9—Transmission device ; 10—Side plough; 11—Hydraulic system; 12—Pneumatic system; 13—Cab

4.2. Car body

1) Structure design of Car body

The car frame is frame structure consisted of beams, coupler longitudinal force is borne by two side beam, and cant beam is set up on the traction beam so that it is convenient to transmit the longitudinal force to the side beam; one crossbeam is set between plate rear part and traction beam.

- Main frame adopts space trussed structure, welded by steel plate and profile steel, which has enough strength and stiffness. This frame can bear at least 1250kN longitudinal compressing force. The both ends of frame are equipped with coupler bumper beam.
- The car body will have strength and stiffness calculation and inspection according to related standard, and important part needs to have non-destructive inspection.
- The car body design can meet the requirements of assembling travel system, regulating device and other systems.
- The car body has car lifter point which can meet the requirements of mobile car lifter.
- The car body has loading point, rerail jacking point which can meet single overall lifting requirements, and it can be double hook lifted and single hook lifted.

4.3. Coupler and air hose – Refer to Annex-1

1) Both ends of the equipment are equipped with coupler and buffer; the coupler shall be towed with the Argentina existing machine.

2) The pneumatic system is consisted of air compressor, pressure regulating device, wind storage tank and control valve etc.; this system is equipped with air drier.

3) The design of coupler and air hose is convenient for coupling and decoupling of the operator.

4.4. Travelling part

1) Travelling part structure and parameters

The whole machine is supported on two axles, and this machine is two-axle vehicle. Both high speed travelling and working travelling adopt hydraulic drive, driving the two axles at the same time. The operation is carried out through two kinds of travelling hydraulic handle in the cab to achieve the bidirectional infinitely variable speeds travelling.

The travelling part adopts symmetric arrangement, and its structure is consisted of axle, wheel, axle box, gear box, rubber spring, hydraulic buffer etc. The travelling structure shall have the following function:

- Insure the regulator can smoothly and safely travel along the track and pass the curve no matter when it is in self-propelled travelling or towed travelling
- Bear acting forces of regulator reliably and transmit to the rail
- Mitigate the impact effect of regulator and rails, and reduce the vibration, to insure the adequate travelling smoothness and good travelling quality
- With the reliable brake structure, no matter in working or travelling condition, the regulator can be parked in specified distance under the effect of brake.

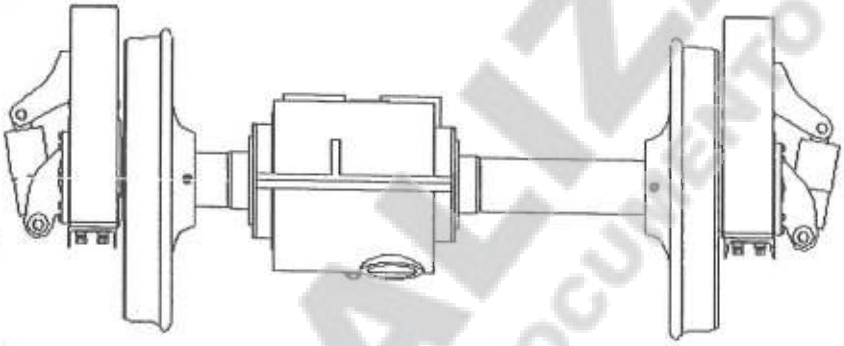

Travelling structure diagram:

- Number of axles: 2
- Number of drive axles: 2
- Wheel base: 5500mm
- Wheel set:2

4.5. Comfortableness of cab

(1) The cab has good vibration reduction and sound insulation design, and the operator chair can lift and its backrest can tilt; this design is convenient for the operator and accords with ergonomics requirements. The box seat is in the cab as well, and this seat can accommodate 4 people, and the tools and devices can be storage under the seat; in normal working condition, the noise in cab shall not higher than 80dB.

(2) The cab is equipped with environment friendly air conditioner (heating in winter can adopt electric heating or engine residual heat warm wind). Three-phase alternating current driven cold and warm air conditioner system to make sure the temperature are not lower than 20°C when the outside temperature is as low as -10°C, and the temperature is not higher than 25°C when the outside temperature is as high as 50°C.

4.6. Dynamical system

Dynamical system is consisted of diesel engine, pump unit, and axle gear box etc.The engine put the splitter gearbox in motion to drive the working of the four oil pump mounted on splitter gearbox. The splitter gearbox and its connected pump are mounted on the transmission frame same with the engine and this transmission frame is mounted on the car frame through damping device.

1）Engine configuration and parameters

Imported original engine has mature application experience. The diesel engine includes speed sensor, water temperature sensor, oil temperature sensor, and oil pressure sensor etc. protection and display devices.

- Brand：Deutz
- Type： BF8L513
- Cylinder diameter × Stroke： 125mm× 130 mm
- Rated power/rotate speed： 210kw/2300rpm
- Maximum torque/rotate speed： 1170Nm/1500rpm
- Fuel consumption rate under rated power： 212g/kwh

2) Transmission device is with advanced technology and stable, reliable performance. It adopts Germany DEUTZ company BF8L513 air-cooled diesel engine with supercharger, the power is 210kW, working speed 2300r/min, max. output torque 890Nm/1400r/min; the whole dynamic transmission system adopts mature SPZ-200 technology (have been used more than 200 sets in domestic market); SPZ-200 transfer case is used for power distributing of the whole machine, which is a three axles first class reductor box, and the two output shafts drive two A4V125 (REXROTH) variable pump, one single joint gear pump, one double joint gear pump.

4.7. Traction dynamic transmission system

1）Traction dynamic transmission circuit drive the universal drive shaft through engine, and universal drive shaft drive the transfer case gear, then in the transfer case, through gear radio conversion drive travelling pump (two), and pump drive the motor through some related control valve, finally the motor through travelling gear box drive the wheel to achieve travelling.

2）Traction dynamic transmission adopts hydrostatic drive, and the two travelling pump through the middle control valve drive two travelling motor, and the motor drive the wheel through travelling gear box, to achieve the whole machine travelling. Travelling gear box set high and low speed gear, the high

speed gear will be adopted in travelling condition, and the low speed gear will be used in working condition. Shifting gear adopts hydraulic valve to control, and the two gears have interlock function and can't be shift at the same time. The vehicle adopts hydraulic control, through forward and backward button to control hydraulic valve, and the hydraulic valve control the pump outlet to achieve changing direction function. Through travelling control valve manipulate pump output to achieve infinite speed adjustment. In neutral gear, the gear of travelling gear box will disengage from the gear connecting motor, and at this time, it can be towed travelling.

4.8. Brake system – Refer to Annex-1

1) Brake system function and composition

Regulator brake system includes air brake, auxiliary brake and parking brake (manual brake). Air brake system integrates brake, control mechanism, air reservoir volume effect, brake cylinder, pipelines and valves, etc.

In high speed travelling, it adopts air brake, and in working condition, it adopts hydraulic brake. Hydraulic brake is effective only in the working condition, from the working system automatically control to the direct hydraulic brake. Parking brake (commonly known as manual brake) is mechanical brake. Braking ratio is not less than 20%.

4.9. Pneumatic system

Pneumatic system is mainly used for the air cylinder. This machine is equipped with five small size air cylinders which are used for sweeping, middle plough locking, and engine throttle controlling. The start-up system is equipped with working air cylinder (70 L), pressure regulating valve, and reversing valve, etc.

The start-up system and the braking system adopt a same compressor of which total exhaust air rate is 600L/min. The system is equipped with cooling unit, dryer, oil-water separator, and pressure regulating valve, etc. The bottom of air cylinder is equipped with water drive valve of which steel tube adopts corrosion assistant precision tube. It also equipped with an external winter source interface as well.

4.10. Working device

1) Middle plough device

Middle plough device is mounted on the frame between axles, composed of one main frame, four spiles, four flanges, and connected with the frame by four connecting rods, and one oil cylinder. The main frame is equipped with a master cylinder using for entirely rise and fall. The four spiles and four flanges are equipped with a cylinder respectively. Operator seated in cabin can control the up-and-down motion of the entire device and four spiles by hand control valves, or control the horizontal

rotation of four flanges by magnetic exchange valve. The middle plough device of ballast regulator can work in following ways:

- Move ballast from middle of rails to shoulders
- Move ballast from shoulders to middle of rails
- Move ballast from left shoulder to right shoulder
- Move ballast from right shoulder to left shoulder
- Move ballast from shoulders to left between rails
- Move ballast from shoulders to right between rails
- Move ballast from right between rails to shoulders
- Move ballast from left between rails to shoulders

2) Side plough device

Two shoulder ploughs are amounted on two sides of the machine separately. In cabin, the angle of the shoulder ploughs can be adjusted by control handles, which control hydraulic control valves. For working in two directions, shoulder plough blade is composed of three sections connected with joints. By adjusting the angle of shoulder ploughs, desired ballast bed shapes, required by rail engineering regulations, can be achieved. During ballast regulator works, when obstacles (such as mark stone, electricity poles, signal stone etc.) appear in front of machine, shoulder ploughs can be operated to avoid them.

3) Sweeping device

Sweeping device is fixed on the rear of the machine. A rubber hose round brush and a bi-directional transverse motion belt dressing are mounted onboard, which can collect redundant ballast in the sleeper and convey to left and right shoulders through changing the direction of conveyor belt. The sweeping device drives the round brush through the chain by hydraulic motor. The speed of round brush is 320rpm. The conveyor belt is driven by motor twirled axle and its speed is 2,8m/s. After operation, there may be a little ballast remains in rail surface, sleeper and clamp opening.

4.11. Hydraulic system

1) Composition and design requirements

The power of ballast regulator's operating mechanism and driving mechanism is provided by hydraulic transmission. Hydraulic system is composed of hydraulic pump, hydraulic motor, cooling machinery, oil filter valve, various valves, and pipe line, etc.

There are four hydraulic motors in hydraulic system. Among them, two are used for the driving of ballast regulator, and the other two are used for sweeping the rolling brush and conveyor of the device.

The hydraulic system adopts integrated design. Reliable sealing and no oil leakage phenomenon.The arrange of hydraulic system pipeline and component are clean, reasonable, normative, which is convenient for the checking and repairing.
The hoses for the hydraulic system will come from PARKER or AEROQUIP.

The major components of all hydraulic system use the world brand-name products (REXROTH or PARKER). The hydraulic system is equipped with emergency device adopting hand emergency pump and electric emergency device are equipped.

2）Other design

All the main parts of hydraulic system should be arranged pressure measuring points, including driving pressure, working pressure, oil supplying pressure, sweeping pressure, conveyor belt pressure, drive controlling pressure, and have a meter to display the data respectively.
The hydraulic system is set up a filtering device which could be replaced easily without discharging hydraulic oil.
The hydraulic system possesses impeccable protective measures. The scratch easily drive cylinder piston rod is equipped with protection cover, and the arrange of hydraulic pipe is reasonable as well, against scratching and other phenomenon.

4.12. Electrical system

The electrical system of SPZ-200A bidirectional ballast regulator is mainly composed of main control electrical system, and work control electrical system.

1）Main control electrical system

1. Engine control
   - The diesel control adopts 24V electronic control to control its own start and stop, as well as its work parameter and work alarm during the operation of diesel. When work swtich and shift switch are on, the start of engine is limited and its shut down is with electricity.
   - Under the low temperature, the first time starting the engine could use preheat ignition device to heat about 30-40 seconds.
2. Alarm system control
   - Filter, diesel oil pressure temperature, hydraulic oil temperature, engine automatic alarm.
   - Traffic safety wind pressure control.
3. Monitoring system
   - First, second axle engage/release gear indication, monitoring the status of driving unit.
   - Sweeping and middle plough indication, monitoring the status of working unit.
   - Oil return filtering indication, monitoring the status of hydraulic oil.